System Configuration and Operation for Subsea Well Intervention Systems

API RECOMMENDED PRACTICE 17G1
FIRST EDITION, XXXX 2021

AMERICAN PETROLEUM INSTITUTE

API Foreword

Nothing contained in any API publication is to be construed as granting any right, by implication or otherwise, for the manufacture, sale, or use of any method, apparatus, or product covered by letters patent. Neither should anything contained in the publication be construed as insuring anyone against liability for infringement of letters patent.

Shall: As used in a standard, “shall” denotes a minimum requirement in order to conform to the specification.

Should: As used in a standard, “should” denotes a recommendation or that which is advised but not required in order to conform to the specification.

May: As used in a standard, “may” denotes a course of action permissible within the limits of a standard.

Can: As used in a standard, “can” denotes a statement of possibility or capability.

This document was produced under API standardization procedures that ensure appropriate notification and participation in the developmental process and is designated as an API standard. Questions concerning the interpretation of the content of this publication or comments and questions concerning the procedures under which this publication was developed should be directed in writing to the Director of Standards, American Petroleum Institute, 200 Massachusetts Ave, Washington, DC 20001. Requests for permission to reproduce or translate all or any part of the material published herein should also be addressed to the director.

Generally, API standards are reviewed and revised, reaffirmed, or withdrawn at least every five years. A one-time extension of up to two years may be added to this review cycle. Status of the publication can be ascertained from the API Standards Department, telephone (202) 682-8000. A catalog of API publications and materials is published annually by API, 200 Massachusetts Ave, NW, Washington, DC 20001.

Suggested revisions are invited and should be submitted to the Standards Department, API, 200 Massachusetts Ave, NW, Washington, DC 20001, standards@api.org.

Introduction

API RP17G1 is a system-based configuration and operational Recommended Practice. The document provides a common road map to ensure that specific operations utilize appropriately designed, engineered, manufactured/fabricated and integrated subsea intervention systems to provide safe and effective well work.

API RP17G1 defines system performance and operational requirements for use of existing equipment and equipment meeting the current requirements set out in API 17G series of documents. Operational guidance specifically includes barrier implementation and testing, equipment readiness and inspection, system monitoring and maintenance, and management of change.

API RP17G1 includes the following:

- Develop safety performance requirements for specified well conditions, planned operations and risks.
- Identify primary and secondary well barriers including their testing requirements.
- Identify technical and operational gaps.
- Recommend system configuration, individual hardware and/or procedural additions or modifications.
- Identify the need for additional testing to reduce project risk.
- Identify the number, location, and performance requirements of Safety Functions.
- Establish safety function closure requirements based on the barrier philosophy for particular well intervention operations.
- Provide minimum requirements on inspection, maintenance and reassessment.
- Conduct verification and validation testing to demonstrate readiness for use.
- Provide minimum requirements on system monitoring.
- Provide inputs and outputs for Global Riser Analysis.

This Recommended Practice is not intended to restrict or deter the development of new operating practices or technology. Rather, it is intended to become a basis from which new subsea well intervention operating practices and technology can develop.

Contents

Table of content will be developed by the API editors prior to publication

1. Scope

API RP17G1 defines minimum requirements of a subsea well intervention system for specific operation(s) and environments to ensure the selected system is fit for purpose. The requirements in this Recommend Practice apply to new and existing subsea well intervention systems irrespective of whether the equipment complies with the latest requirements of API 17G.

All subsea well intervention systems are covered by this Recommended Practice and the equipment typically included in (but not limited to) the system is described in the suite of API 17G intervention documents. Additional equipment not identified in the suite of API 17G intervention documents, which are required for functionality and interface with the subsea well intervention system, shall follow the requirements defined in this Recommended Practice.

2. Normative References

The following referenced documents are indispensable for the application of this document. For dated references, only the edition cited applies. For undated references, the latest edition of the referenced document (including any amendments) applies.

API Standard 2RD; *Dynamic Risers for Floating Production Systems.*

API Specification 6A; *Specification for Wellhead and Tree Equipment.*

API Specification 16A; *Specification for Drill Through Equipment.*

API 17A; *Design and Operation of Subsea Production Systems—General Requirements and Recommendations.*

API Standard 17G; *Design and Manufacture of Subsea Well Intervention Equipment.*

API 17G5; *Subsea Intervention Workover Control Systems.*

API RP17N; *Recommended Practice on Subsea Production System Reliability, Technical Risk, and Integrity Management.*

API Standard 53; *Well Control Equipment Systems for Drilling Wells.*

API Specification Q1; *Specification for Quality Management System Requirements for Manufacturing Organizations for the Petroleum and Natural Gas Industry.*

API Specification Q2; Specification for Quality Management System Requirements for Service Supply Organizations for the Petroleum and Natural Gas Industries.

ASME BPVC SECTION IX; *ASME Boiler and Pressure Vessel Code, Section IX: Welding and Brazing Qualifications.*

BS7910; *Guide to methods for assessing the acceptability of flaws in metallic structures*.

DNVGL-RP C210; *Probabilistic methods for planning of inspection for fatigue cracks in offshore structures.*

DNVGL-RP-C203; *Fatigue Design of Offshore Steel Structures*.

DNVGL-RP-F204; *Riser fatigue*.

DNV-RP-D102; *FMEA of Redundant Systems.*

IEC 60812 Edition 3; *Failure Modes and Effects Analysis.*

IEC 61508; *Functional Safety of Electrical/Electronic/Programmable Electronic Safety-Related Systems.*

IEC 61511; *Functional safety - Safety instrumented systems for the process industry sector*.

ISO 9001; *Quality management systems — Requirements*.

ISO 9712; *Non-Destructive Testing - Qualification and Certification of NDT Personnel*.

ISO TR 12489; *Petroleum, Petrochemical and Natural Gas Industries - Reliability Modelling and Calculation of Safety Systems.*

ISO 14224; *Petroleum, Petrochemical and Natural Gas Industries - Collection and Exchange of Reliability and Maintenance Data for Equipment.*

NOG-070:2018; *Application of IEC 61508 and IEC 61511 in the Norwegian Petroleum Industry (Also known as the OLF 070 Guideline).*

NORSOK D-010:2021; *Well integrity in drilling and well operations*.

3. Terms, Definitions, Abbreviations, and Symbols

3.1 General

For the purposes of this document, the following terms and definitions apply

3.2 Terms and Definitions

3.2.1 abnormal conditions

A change to operating conditions outside of normal range. For example; monitored functions, alarms, excessive riser loading, or a change in control pressure(s) or voltage(s).

3.2.2 accumulator system

An arrangement of hydraulic accumulators working together as a system. Unless otherwise specified, all accumulators of the IWOCS are located both subsea and on the surface.

3.2.3 autoshear

A controlled sequence that is designed to automatically isolate the well subsea following an unintentional disconnect. The system requires to be capable of performing the expected shearing and sealing action under MASP conditions as defined for the operation.

NOTE Specifics of the design are based upon system architecture and safety strategy requirements.

3.2.4 component / part

An individual piece used in the makeup of equipment.

3.2.5 controls design basis

A document created to accompany the controls and shutdown logic documentation used to explain the reasoning behind the various controls and shutdown system design decisions.

This document is useful for any system where a justification or explanation of the design decisions is helpful in understanding design intent, especially when future changes are considered.

3.2.6 deadman

A controlled sequence that is designed to automatically isolate the well subsea in the event of loss of control. The system requires to be capable of performing the expected shearing and sealing action under MASP conditions as defined for the operation.

NOTE Specifics of the design are based upon system architecture and safety strategy requirements.

3.2.7 drift-off

Unintended lateral movement of a dynamically positioned vessel off its intended location relative to the wellhead, generally caused by loss of station-keeping control or propulsion.

3.2.8 drive-off

Unintended movement of a dynamically positioned vessel off location driven by the vessel's main propulsion or station-keeping thrusters.

3.2.9 dry fire test

Test performed without hydraulic supply to the system. Often used to verify control system functionality without performing unnecessary functions on equipment.

3.2.10 dynamic positioning

Computerized means of maintaining a vessel on location by selectively activating thrusters.

3.2.11 end user

Organization that authorizes the use of a subsea well intervention system for well operations.

NOTE 1 The end user is responsible for system engineering, system design and operation of the subsea well intervention system.

NOTE 2 The end user maybe known as “Well Operator” within some industry documentation.

3.2.12 emergency disconnect sequence (EDS)

A controlled sequence that is designed to isolate the well subsea and disconnect the LMRP in the event of an emergency situation.

NOTE The EDS is a programmed sequence that leaves the subsea BOP stack in a desired state and disconnects the lower marine riser package (LMRP) from the lower BOP stack. The sequence should activate at least one shear ram to seal the well prior to disconnect the LMRP connector. An EDS requires to be available on subsea BOP stacks that are run from a dynamically positioned vessel, and is optional for moored vessels.

3.2.13 emergency quick disconnect (EQD)

A controlled sequence that is designed to isolate the well subsea and disconnect the landing string/riser from the well in the event of an emergency situation Includes closing the barrier elements and unlatching the landing string/riser.

3.2.14 emergency shutdown (ESD)

A controlled sequence that is designed to isolate the well subsea in the event of an emergency. i.e., closing the barrier elements.

3.2.15 equipment

A single completed unit that can be used for its intended purpose within the scope of this document without additional components.

3.2.16 equipment operator

Individual that is responsible for the (hands on) functional operation of a subsea well intervention system for well operations.

NOTE The Equipment Operator maybe known as “Operator” within some industry standards/specifications.

3.2.17 equipment specification

Document that identifies the equipment capabilities to comply with the functional specification.

3.2.18 extreme load condition

Events that produce loads, individual and combined, as a result of environmental and operational criteria that exceed the Normal Structural Design factor but is equal to or less than the Extreme Structural Design Factor.

Exceedance of the Rated Working Pressure (RWP) or Temperature Rating of the equipment is prohibited.

NOTE Table 2 of API Standard 17G lists the Structural Design Factors

3.2.19 fail-close (FC)

Actuated device designed to revert to the closed position when the actuator is de-energized.

3.2.20 fail-in-place (FIP)

Actuated device designed to remain in the current position when the actuator is de-energized.

3.2.21 fail-open (FO)

Actuated device designed to revert to the open position when the actuator is de-energized.

3.2.22 fit for purpose

‘Fit for purpose’ means able to perform the intended functions of the system.

3.2.23 functional load capacity

Minimum capacity of relevant functional failure modes, i.e., minimum of preload exceedance, seal/gasket leak tightness, loss of functionality due to permanent deformations, etc.

NOTE “Leak tightness” is a generic term used to describe non-exceedance of specific leak acceptance criteria.

3.2.24 functional specifications

Features, characteristics, process conditions, boundaries, and exclusions that define the performance and use requirements of a managed product, including any end user specific requirements.

3.2.25 global riser analysis (GRA)

Analysis of the complete subsea well intervention system from below mudline to traveling block, including tensioner joint, using beam elements.

NOTE Bending moments and effective tension distributions along the riser string due to functional loads, vessel motions, and environmental loads are determined by global riser analysis (GRA).

3.2.26 interface management plan

Defined process for the identification, management, exchange, agreement, and documentation of information between manufacturers, service providers and vessel contactors whose equipment interface or interact together as part of a larger assembly or system. Interface information may include data such as dimensions, tolerances, weight, center of gravity, material properties, capacities, ratings, limitations, functional data, vessel data or operation requirements.

3.2.27 loading (load) classification

Load classification refers to an assignment of either normal, extreme, or survival load conditions to an operational stage or load case to be analyzed within the GRA.

NOTE normal, extreme, and survival load limits for equipment are defined within API 17G.

3.2.28 loss of control

Inability to initiate safety functions from surface due to loss of hydraulic supply and/or signal transmission.

EXAMPLES: Direct Hydraulic System - loss of surface hydraulic supply; Electro-Hydraulic System - loss of electrical signal transmission and/or surface hydraulic supply.

3.2.29 manufacturer

Organization that is responsible for the design and manufacture of equipment for use in subsea well intervention systems and sub-systems.

NOTE The manufacturer is responsible for creation of; design documentation, validation testing documentation, manufacturing record books and operating documentation for the equipment.

3.2.30 maintenance plan

Structured and documented set of tasks that include the activities, procedures, resources and the time scales required to carry out maintenance.

3.2.31 modes of operation

Used to describe the type of subsea well intervention equipment e.g., equipment that is connected to a fluid conduit tieback riser, either inside the marine riser (TBIRS) or open water (OWIRS), riser subsea well intervention system (RSWIS), downline connected equipment, and remotely operated vehicle (ROV) intervention equipment.

3.2.32 normal load condition

Events that produce loads, individual and combined, as a result of environmental and operational criteria up to the upper limit of the Normal Structural Design Factor.

Exceedance of the Rated Working Pressure (RWP) and/or Temperature Rating of the equipment is prohibited

NOTE Table 2 of API Standard 17G lists the Structural Design Factors

3.2.33 operability

Ability to safely perform the planned operation without exceeding the capacity and performance limits of the equipment being utilized.

3.2.34 operational scenarios

Used to describe the stages of the operation, intervention activities, and the use of safety functions.

3.2.35 primary well barrier

First well barrier that prevents flow from a potential source of inflow.

3.2.36 process shutdown (PSD)

A controlled sequence that is designed to isolate the well at surface by closing the surface tree wing valve(s).

3.2.37 protection layer

Any independent mechanism that reduces risk by control, prevention or mitigation. For the purposes of this document, this definition relates to reducing the probability and consequences of failures, hazards, and accidental events.

NOTE Risk is a function of probability and consequence.

3.2.38 refurbishment

Process of disassembly, inspection, reassembly, and testing, with or without the replacement of parts in order to correct failed or worn components.

NOTE Sometimes referred to as Repair, but does not include machining, welding, heat treating, or other manufacturing operations of component parts.

3.2.39 remanufacture

Process of disassembly, reassembly, and testing, with or without the replacement of parts, in which machining, welding, heat treatment, or other manufacturing is employed.

3.2.40 riser model

Structural model established from the tabulated data of the riser to describe the actual riser and used in a global analysis of the riser system.

3.2.41 risk assessment

Overall process of performing a risk assessment including: Establishment of the context, performance of the risk analysis, risk evaluation, and to assure that the communication and consultations, monitoring and review activities, performed prior to, during and after the analysis has been executed, are suitable and appropriate with respect to achieving the goals for the assessment.

3.2.42 safety class device

Device required to achieve a safe-state condition as a part of a safety function.

3.2.43 safety function

Sequenced series of device actions intended to achieve a safe-state in relation to a specific hazardous event.

NOTE Safety functions for subsea well intervention systems typically include process shutdown (PSD), emergency shutdown (ESD), emergency quick disconnect (EQD), deadman, and autoshear.

3.2.44 safe-state

Condition that exists when all safety class devices, defined by a safety function, have functioned as intended.

3.2.45 secondary well barrier

Second well barrier that prevents flow from a potential source of inflow.

3.2.46 service life

Duration of time in which the equipment performs under the specified design conditions, i.e., time in active connected riser operations, excluding storage periods.

NOTE The service life is normally a small fraction of the design life.

3.2.47 service provider

Organization that provides subsea well intervention system services and products.

3.2.48 stroke

Total upward and downward vertical movements of the vessel relative to the riser, e.g., travel of the riser tensioner, drawworks, and slick joint.

NOTE It includes effects from environmental loads, functional loads (e.g., top tension, temperature, mean static vessel offset, and pressure).

3.2.48 structural load capacity

Minimum capacity of relevant structural failure modes, i.e., minimum of yielding, local failure, buckling, and mechanical disengagement.

3.2.49 system

Collection of equipment utilized to perform its intended purpose within the scope of this document.

3.2.50 system integrator

Organization that is responsible for bringing together sub-systems, ensuring that those sub-systems function together in a subsea well intervention system.

NOTE Responsible for the system integration, collection/collation of all manufacture data and manufacture record books (where applicable), collection of equipment assembled together, verification testing documentation, operation procedures, maintenance and storage procedures etc.

3.2.51 system integration

Process of bringing together equipment into one subsea well intervention system and ensuring that the equipment functions together as a system that is fit-for-purpose for use in end user's well - specific conditions and operations.

3.2.52 system integration test (SIT)

Test conducted to validate that the requirements for a specific intended use or application, of a set of products that form an integrated system, have been fulfilled.

3.2.53 survival load condition

Events that produce loads, individual and combined, as a result of environmental and operational criteria that exceed the Extreme Structural Design factor but is equal to or less than the Survival Structural Design Factor.

Exceedance of the Rated Working Pressure (RWP) or Temperature Rating of the equipment is prohibited.

NOTE 1 Table 2 of API Standard 17G lists the Structural Design Factors

NOTE 2 A survival event of a component means that the component does not fail, but it can present one or more kinds of degradations that may impact its specified performance or service life.

3.2.54 well barrier

Envelope of one or several well barrier elements preventing fluids from flowing unintentionally from the reservoir to environment.

3.2.55 well barrier element (WBE)

A physical element which in itself does not prevent flow but in combination with other WBE's forms a well barrier.

EXAMPLE Pressure containing bodies, connectors, seal/gasket connectors, pipes, components (e.g., valves, rams etc.) and equipment (e.g., WCP, SSTT and surface tree).

3.2.56 well control

Collective expression for all measures that can be applied to prevent uncontrolled release of wellbore fluids to the environment or uncontrolled underground flow.

3.2.57 well control device

A component that can or may be used as a barrier.

3.2.58 Well Specific Operating Criteria (WSOC)

Guidelines on the operational, environmental and equipment performance limits for the location and specific operation.

NOTE This may also be known as Well Specific Operating Guidelines (WSOG).

3.3 Abbreviated Terms

BOP - Blowout Preventer

EDP - Emergency Disconnect Package

EQD - Emergency Quick Disconnect

ESD - Emergency Shutdown

FAT - Factory Acceptance Test

HPU - Hydraulic Power Unit

IWOCS - Intervention Workover Control System

LWRP - Lower Workover Riser Package

MASP- Maximum Anticipated Surface Pressure

MOC – Management of Change

MOP - Minimum Operating Pressure

OEM - Original Equipment Manufacturer

OWIRS - Open Water Intervention Riser System

POD – Point of Disconnect

PSD - Process Shutdown

P-Y - Numerical model curves for soil resistance. P is force per unit length and Y is resulting deflection.

RAO - Response Amplitude Operator

ROV - Remotely Operated Vehicle

RSWIS - Riserless subsea well intervention system

RWP - Rated Working Pressure

SAF – Stress Amplification Factor

SIT - System Integration Test

SITP – Shut-In Tubing Pressure

SPWIS - Subsea pumping well intervention system

TBIRS – Through-BOP Intervention Riser System

TOE - Tension-offset envelope

UPS - Uninterruptable Power Supply

VIV – Vortex-induced vibration

WKM - Well Kill Margin

ΔM-N – Bending moment range vs. number of cycles

4. System Requirements

4.1 General

The purpose of this section is to specify the minimum requirements for the well intervention system design and configuration when used for specific operation(s) and environments. These requirements apply to both new and existing systems to ensure the system is fit for purpose. The system includes both permanently and temporarily installed equipment planned to be used as a barrier during well work and recovery operations.

The scope of this section includes; System Definition, System Engineering, Barrier Requirements, Design Principles, Safety Strategy, Operational Principles, Safety Principles, Risk Assessment, System Design and System Review.

All subsea well intervention system modes of operation are covered within this section.

The end user or system integrator (on behalf of end user) is responsible for defining the equipment used in the System Design including the functional requirements. The System Review is required to ensure that subsea well intervention system, meets requirements and is operated and maintained for its intended use, throughout its intended life.

The scope of equipment typically included in (but not limited to) the system requirements for the open-water riser intervention and through-BOP intervention modes are shown in API Standard 17G.

All equipment comprising the well intervention system is required to be reviewed for the specific application:

— New well intervention equipment compliant to API Standard 17G series;

— Existing equipment used in a well intervention system shall be built in accordance with a recognized industry standard that was in effect at the time of the equipment's manufacture;

— Intervention equipment not in scope of the API 17G series, but required for functionality or interface to the overall system (e.g., Surface PCE, Drawworks, well test, bails, elevators, riser tensioners);

— Specialized Intervention equipment not covered under API 17G series.

NOTE 1 Equipment nomenclature for a typical subsea well intervention system general arrangement in open-water intervention mode is shown in Figure 1.

NOTE 2 Equipment nomenclature for a typical subsea well intervention system general arrangement in through-BOP intervention mode is shown in Figure 2.

NOTE 3 Typical schematics for horizontal and vertical subsea trees are shown in Figure 3 to Figure 6.

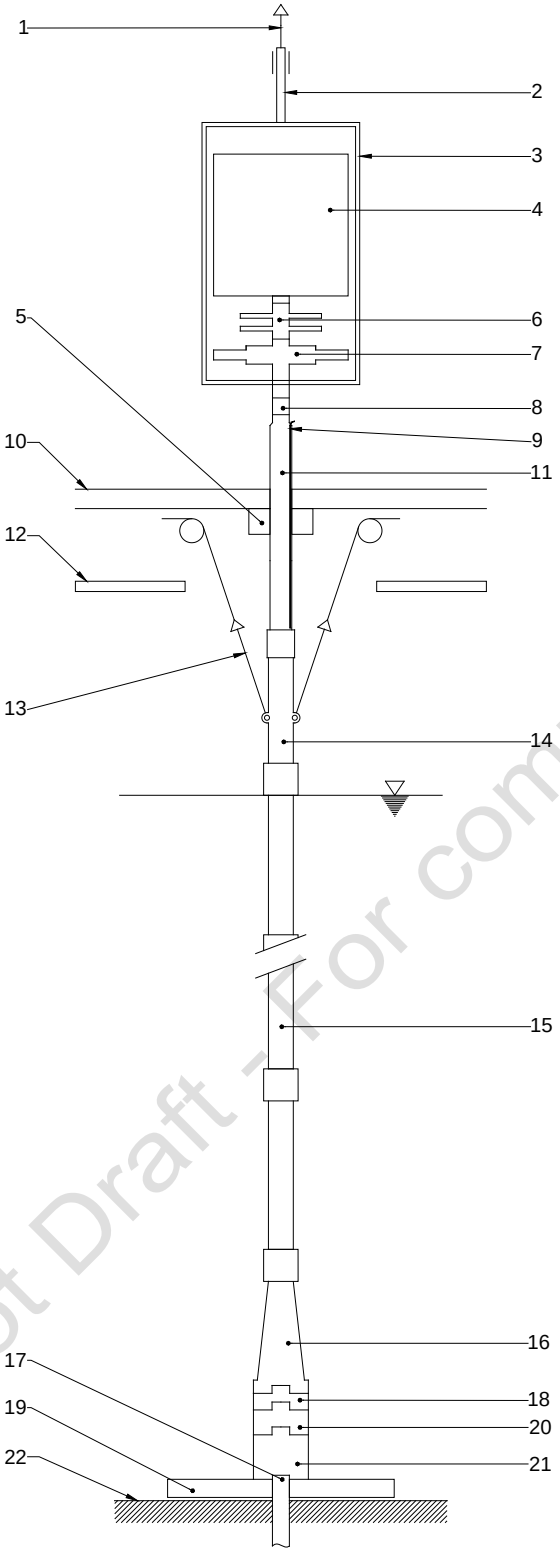

Key

1	traveling block
2	drill sub
3	surface tree tension frame
4	coiled tubing injector
5	roller bushing
6	well control stack
7	surface tree
8	surface tree adapter joint
9	umbilical (to hose reel)
10	drill floor
11	cased wear joint
12	moonpool area
13	riser tension wires
14	tension joint
15	standard C/WO riser joints
16	stress joint
17	wellhead
18	emergency disconnect package
19	guide base
20	well control package
21	subsea tree
22	seabed

Figure 1— Typical Subsea Well Intervention System General Arrangement Open-Water Mode

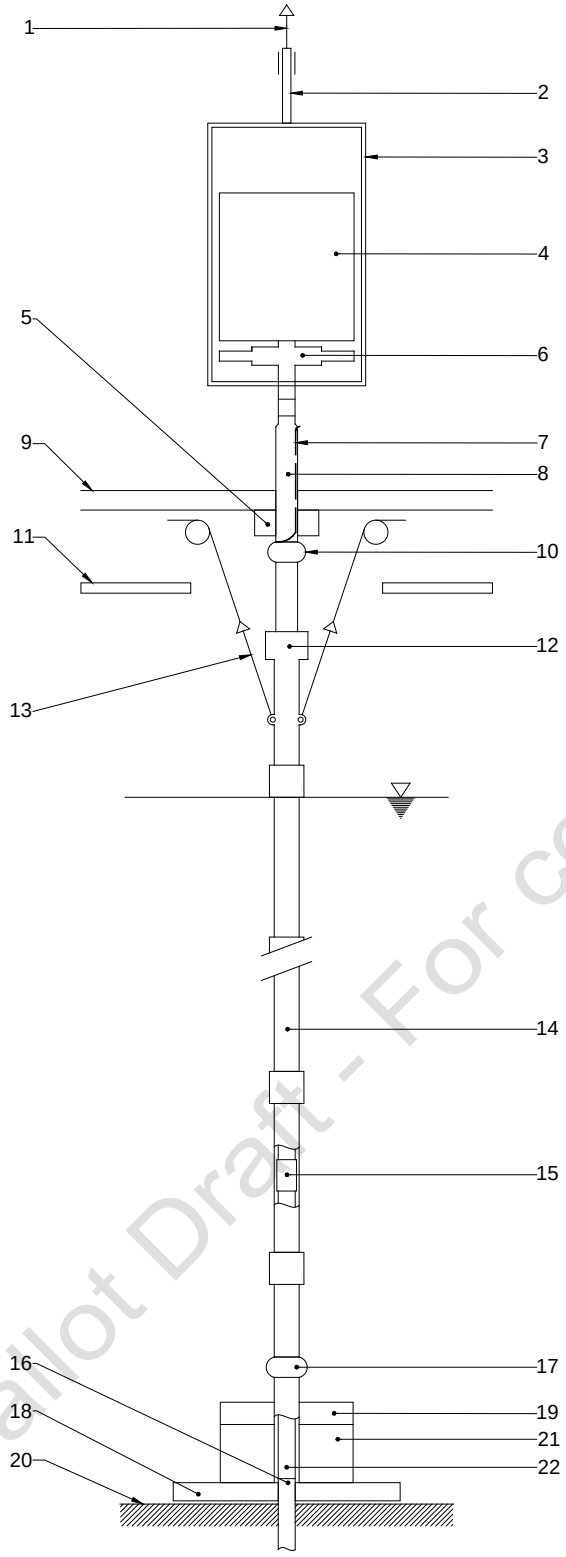

Key

1 traveling block
2 drill sub
3 surface tree tension frame
4 surface equipment (wireline or coiled tubing stack)
5 roller busing
6 surface tree
7 umbillical (to hose reel)
8 cased wear joint / riser sealing mandrel
9 drill floor
10 ball/flex joint
11 moonpool area
12 telescopic joint
13 riser tension wires
14 drilling riser joints
15 landingstring or C/WO riser joints
16 wellhead/subsea tree
17 flex joint
18 guide base
19 LMRP
20 seabed
21 subsea drilling BOP
22 SSTTA or BOP Spacer joint

Figure 2— Typical Subsea Well Intervention System General Arrangement Through-BOP Intervention Mode

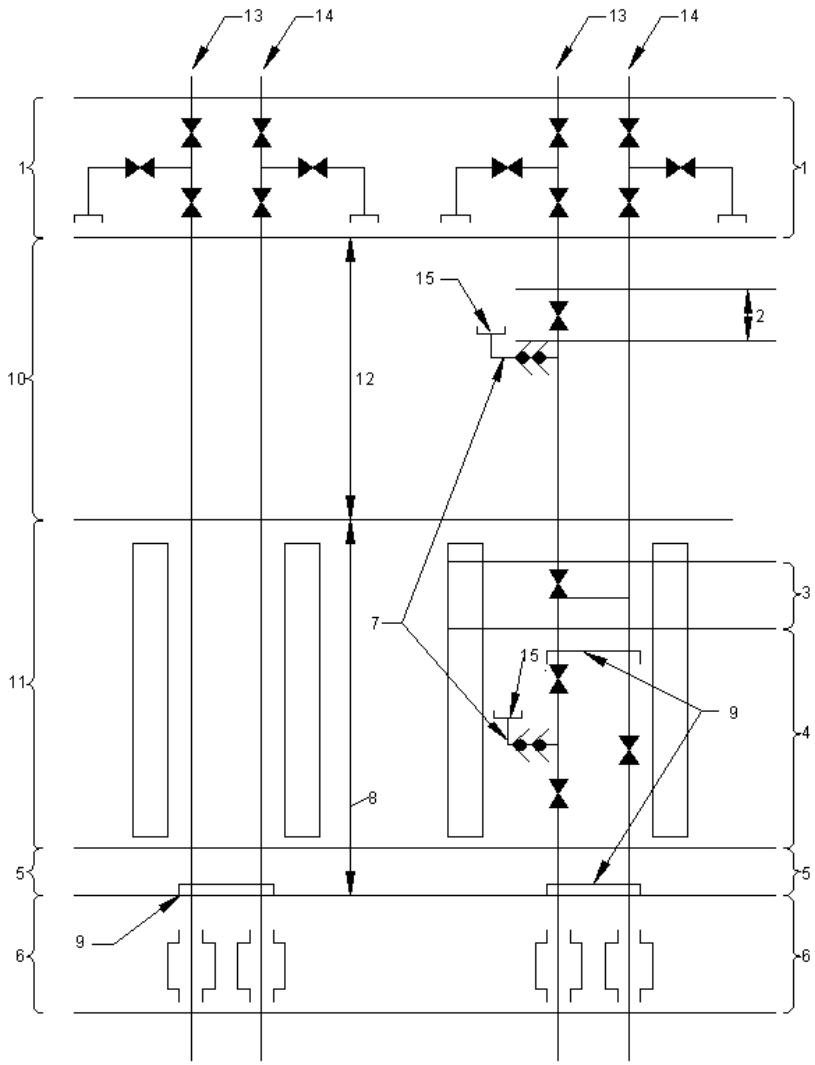

Key

1	surface tree	6	tubing hanger	11	subsea drilling BOP Stack
2	lubricator valve	7	chemical injection	12	landing string or C/WO riser
3	retainer valve	8	subsea test tree assembly or BOP spacer joint	13	production bore
4	subsea test tree	9	disconnect point	14	annulus bore
5	tubing hanger running tool	10	drilling riser	15	connection to landing string umbilical

Figure 3— Typical Subsea Well Intervention System Schematic — Vertical Tree (Dual Bore) Through-BOP/drilling Riser Intervention Mode

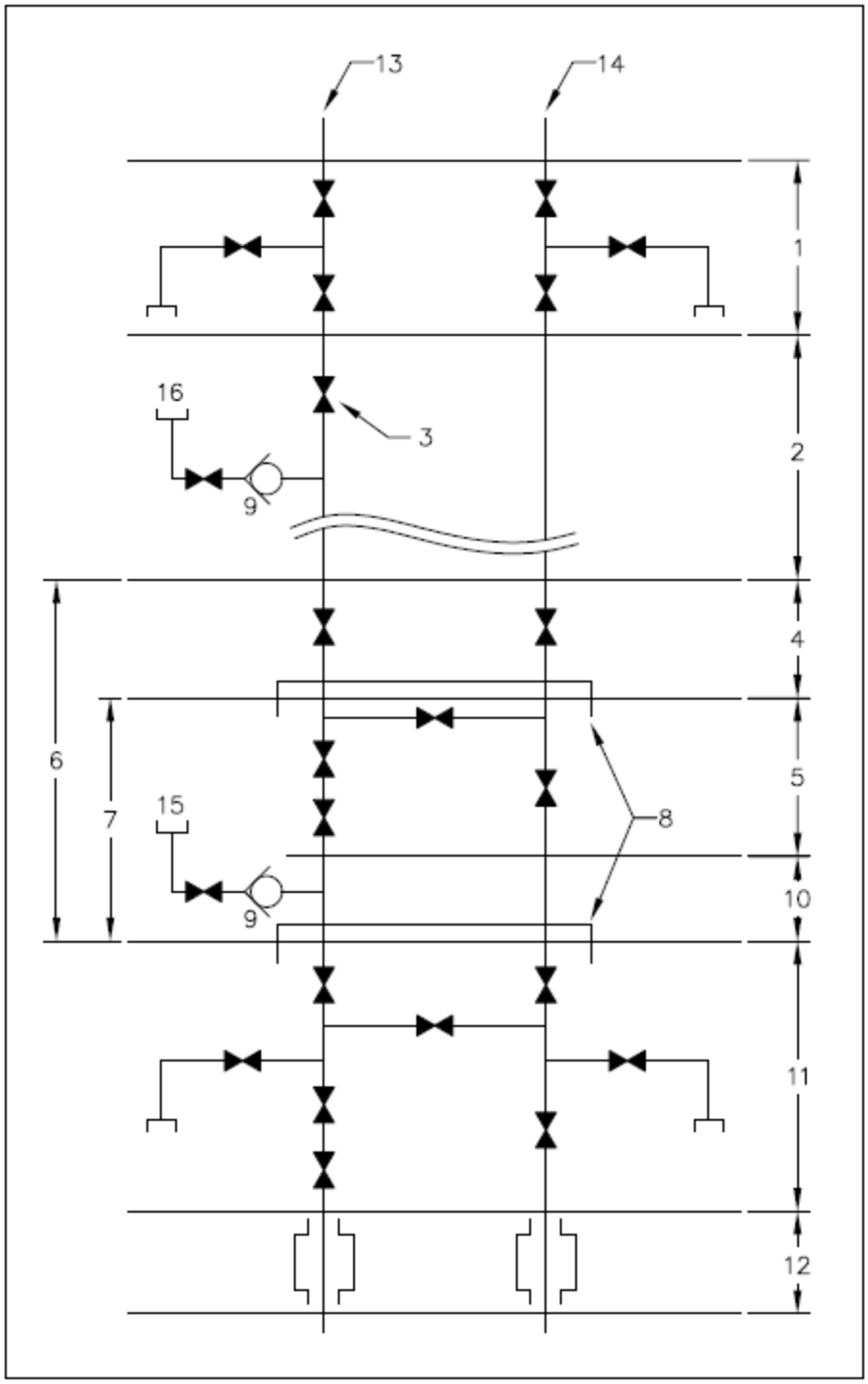

1 surface tree
2 C/WO riser
3 lubricator valve
4 emergency disconnect package
5 shear/seal device
6 lower workover riser package
7 well control package
8 disconnect point
9 chemical injection
10 tree running tool
11 vertical tree
12 tubing hanger
13 production bore
14 annulus bore
15 connection to W/O umbilical
16 connection to LV umbilical

Figure 4— Typical Subsea Well Intervention System Schematic — Vertical Tree (Dual Bore) Open-Water Riser Intervention Mode

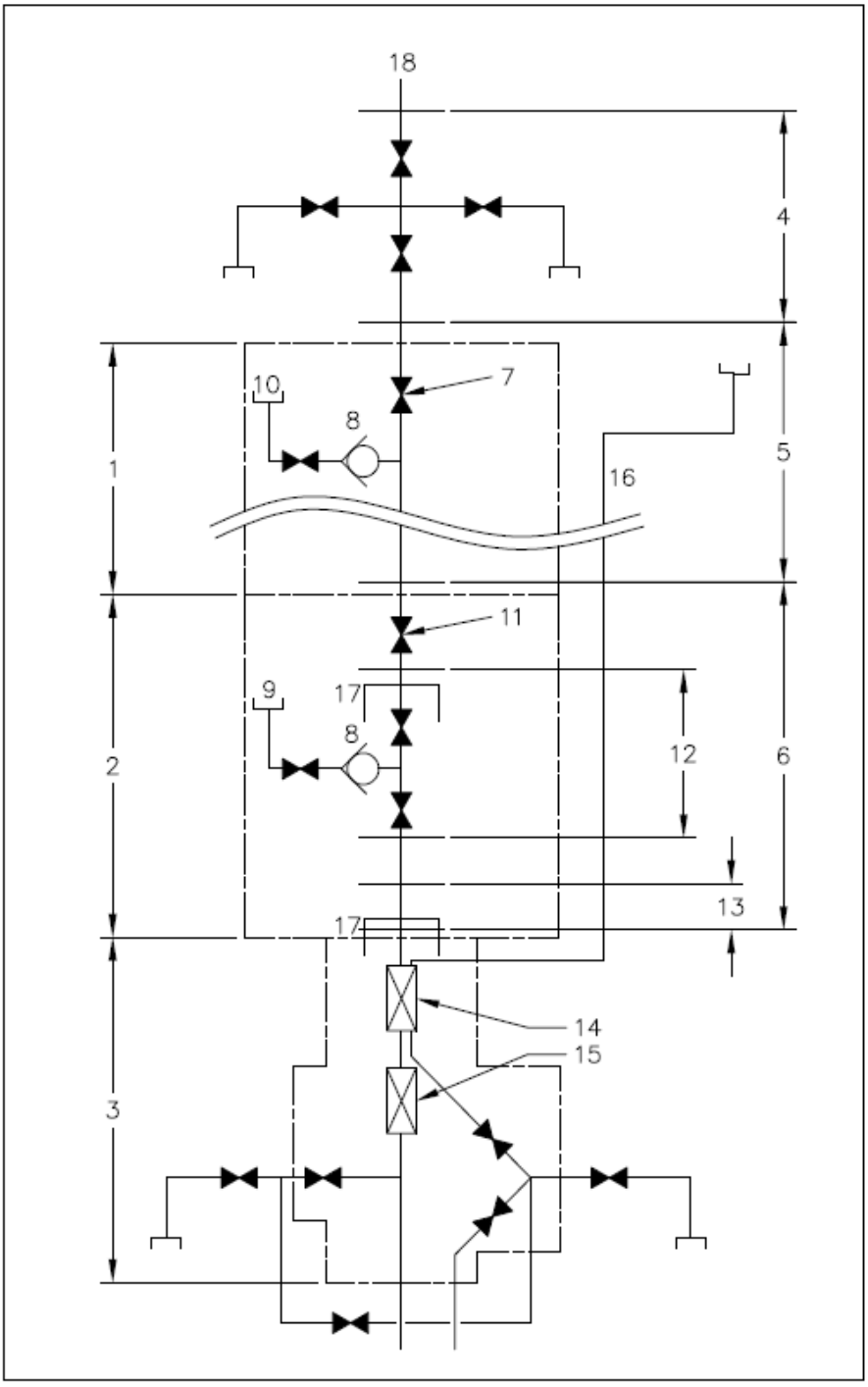

1 marine riser
2 BOP stack
3 horizontal tree
4 surface tree
5 landing string
6 SSTTA
7 lubricator valve
8 chemical injection
9 connection to SSTTA umbilical
10 connection to LV umbilical
11 retainer valve
12 subsea test tree
13 tubing hanger/tree cap running tool
14 internal tree cap & plug
15 tubing hanger plug
16 BOP choke/kill line
17 disconnect point
18 production bore

Figure 5— Typical Subsea Well Intervention System Schematic — Horizontal Tree Through-BOP/drilling Riser Intervention Mode

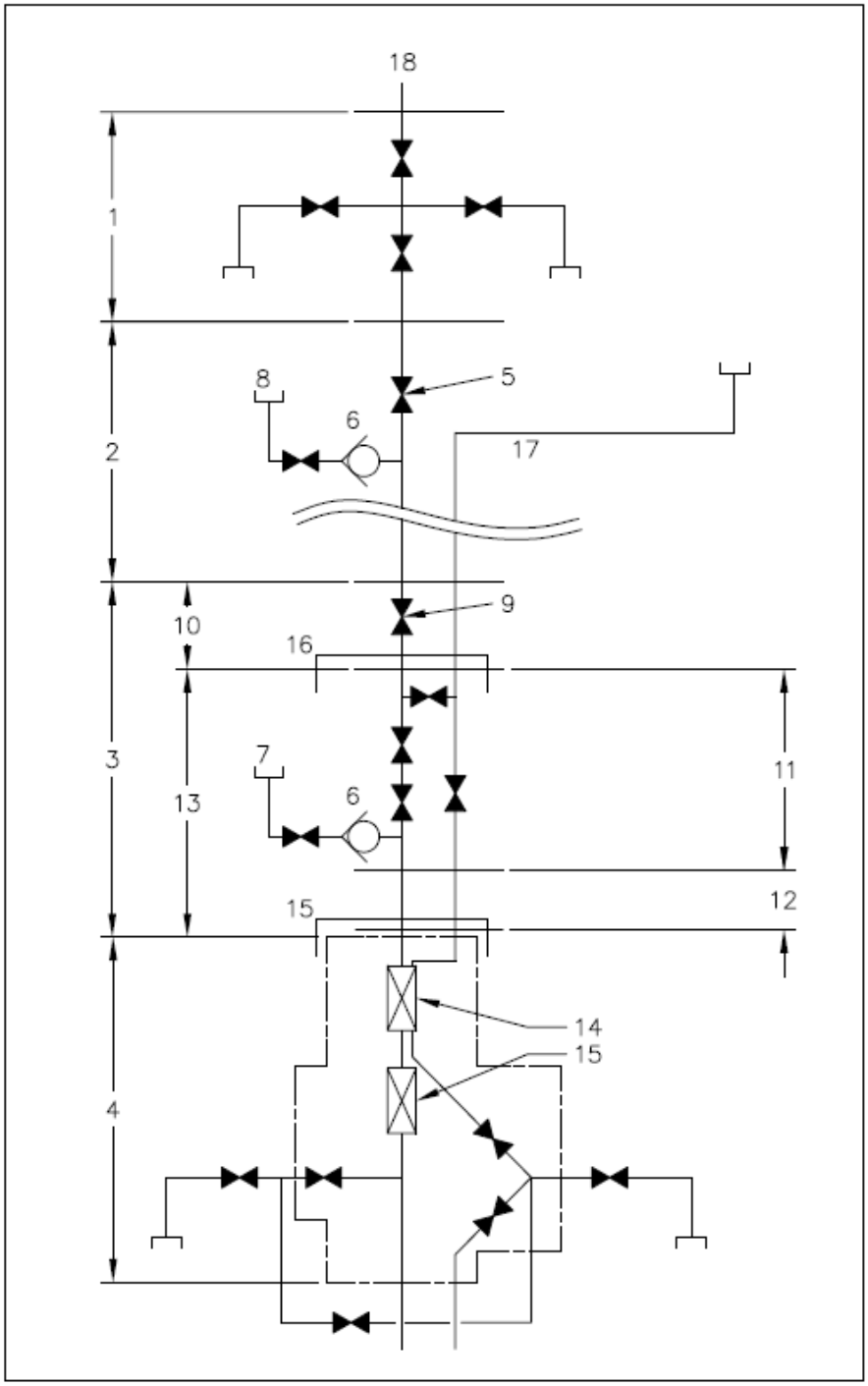

1 surface tree
2 C/WO riser
3 well control package
4 horizontal tree
5 lubricator valve
6 chemical injection
7 connection to W/O umbilical
8 connection to LV umbilical
9 retainer valve
10 emergency disconnect package
11 shear/seal device
12 tree running tool
13 lower riser workover package
14 internal tree cap & plug
15 tubing hanger plug
16 disconnect point
17 annulus circulation line
18 production bore

Figure 6— Typical Subsea Well Intervention System Schematic — Horizontal Tree Open-Water Riser Intervention Mode

4.2 System Engineering

4.2.1 General

System engineering is a multidisciplinary approach that covers the overall system, from the reservoir to the vessel, and considers the environment, interfaces and requirements for all phases of the operations including emergency operations and re-establishment of the system to the well. The process ensures that the barrier philosophy between the reservoir, people and/or the environment is managed and mitigates escalation of a single point failure into a safety or environmental event.

To be effective, system engineering identifies each specific interface and application as to maintain focus on the installation of barriers during normal and emergency situations. It includes end-user requirements as well as regulatory requirements and at a minimum, documents the following:

— System Functional Requirements which define the system;
— Design Basis;
— System Design;
— Interface Management;
— System Review;
— System verification and validation.

NOTE A typical engineering process flowchart is shown in Figure 7 and additional guidance is available in API 17A.

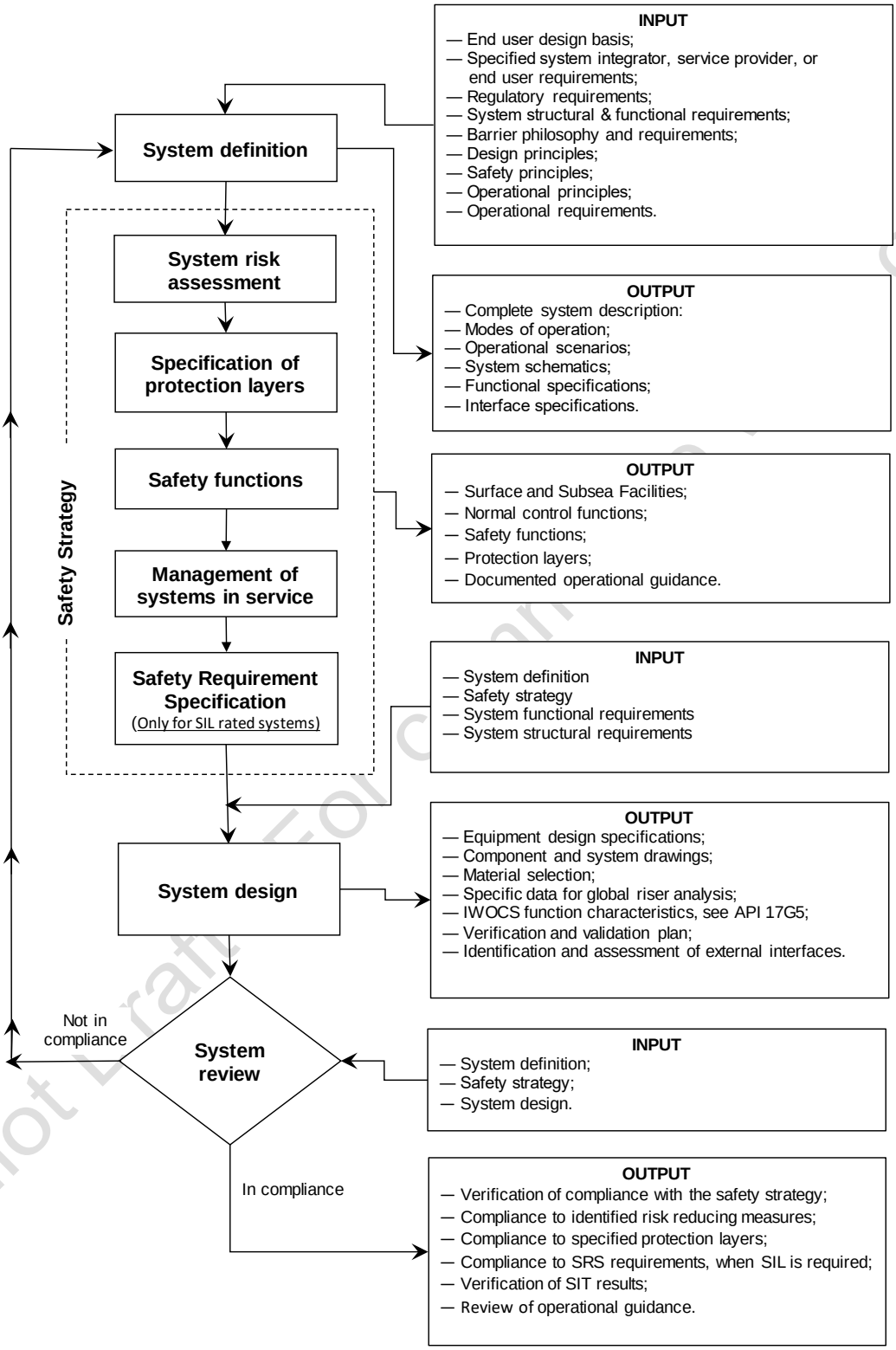

Figure 7— Typical System Engineering Flowchart

4.2.2 System Definition

The system shall be defined with regard to the following input information:

— specified system integrator, service provider, and/or end user structural and functional requirements;

— regulatory requirements;

— safety principles;

— design principles;

— operational principles;

— barrier philosophy and requirements;

— operational requirements.

The system definition supporting the design shall be presented (as a minimum) as follows:

— Complete system description, including:

  a. modes of operation;

  b. operational scenarios;

  c. system schematics;

  d. functional specifications;

  e. interface specifications.

4.3 Safety Principles

The following principles shall be utilized and documented when selecting the appropriate subsea well intervention system for specific operations and environments:

a) Risks/hazards associated with the design and operation of the system to be identified and assessed;

NOTE This includes the risks/hazards of equipment failures, human errors, and resulting hazards which arise from extreme and survival events.

b) eliminate or reduce hazards as far as is reasonably practicable, in the event the hazard cannot be eliminated, reduce the probability or consequence of the hazard to prevent escalation or an unacceptable outcome;
c) apply appropriate protection measures/layers against hazards which cannot be eliminated;
d) inform users of residual hazards and indicate whether it is necessary to take appropriate special measures to reduce the risks at the time of installation, use and/or retrieval;
e) human errors should be controlled by requirements for organization of the work, competence of persons performing the work, verification, and quality assurance during all relevant phases of design and operation.

The outcome of a systematic identification and evaluation of the hazards and effects may define the need for risk-reducing measures and performance standards for the appropriate subsea well intervention system.

If a potential for misuse is known or can be foreseen, the subsea well intervention system requires re-design or protection measures/layers applied to the risks/hazards which cannot be eliminated.

4.4 Design Principles

The system shall be designed to ensure that no single failure can lead to loss of well control, degradation of safety functions, personnel safety and loss of capital assets. Potential single and common failures require to be identified

and measures implemented to reduce their probability of occurrence or consequences. The system design should eliminate or reduce hazards in lieu of hazard management or controls.

The overall system design shall be to achieve a safe state as defined in the safety strategy.

The system shall:

— have the necessary safety functions to achieve a safe-state in relation to a specific hazardous event;

— have safety class devices to achieve a safe-state condition after initiation and remain in that state until manually reset by the operator under controlled conditions;

— not use components or circuits that are capable of preventing the safety class devices achieving a safe condition for fail-close devices used in safety functions.

Activation of a safety function shall not prevent activation of a different safety function i.e. activation of PSD will not prevent activation of the ESD or EQD.

The system rated working pressure shall meet or exceed the maximum shut in wellhead pressure plus a well kill margin (WKM).

For all operations, the system design shall account for the combinations of functional, environmental, and survival load conditions.

The system shall be designed to prevent damage to the primary and secondary well barriers in the event of survival load conditions. After a survival load condition event the system shall meet the following criteria:

— The well barriers remain leak tight;

— All components/equipment/connectors are functional;

— Survival load cases imparted by the subsea intervention system shall be analyzed to ensure that permanently installed equipment is not damaged such that replacement is required.

The system design criteria require to take into account materials selection including design life, inspection and maintenance philosophy, safety and environmental profiles, operational reliability, and specific project requirements.

The system design should take into account the following aspects:

— the required operational life from commissioning to decommissioning;

— the materials selection philosophy;

— the degree of flexibility required to allow for reservoir uncertainty;

— the application of new technology and risk management;

— external and internal interfaces;

— the application of definitions, specifications, standards, rules and regulations to be used in the design;

— the project required availability;

— the intervention, maintenance, repair, sparing, preservation, and storage philosophies.

4.5 Operational Principles

All operations shall be controlled by written procedures and all activities associated with the system shall be performed such that no single failure can lead to loss of well control, degradation of safety functions and personnel safety, and to loss of capital assets. This applies both to operational procedural errors and to failure of equipment used in operations.

A risk assessment shall be performed to identify potential failures modes resulting from operational activities.

Operating procedures shall comply with the safety strategy and manufacturer's recommendations.

Operators shall be instructed in the use of the relevant system and in recognizing unplanned events and the required course of action if they happen.

Pre-deployment and post installation checks and tests shall be implemented to verify the system prior to use.

Operational limits shall be governed by the weakest component of the system and operational parameters monitored and logged to ensure they stay within the system design limits.

NOTE - The weakest component may not be part of the subsea well intervention system itself but may be part of the equipment or facilities associated with either topside and or subsea systems. This also may be limited by the design pressure, design temperature and allowable external loads.

All deviations not documented in existing procedures/Recommended Practices and operating limits shall be recorded and implications for further use of the intervention system investigated prior to continuing operations.

4.6 Barrier Philosophy & Requirements

A barrier philosophy shall be established and implemented to meet the regulatory requirements under which the system is operating. A double barrier philosophy is the minimum recommended standard for well intervention systems. Two independently verified well barriers between the reservoir and the environment shall be available during all well activities and operations, including suspended or abandoned wells, where a pressure differential exists that may cause uncontrolled outflow from the well to the external environment.

The following are well barriers selection requirements:

a) meet the design and qualifications requirements set out in this RP;

b) withstand the maximum anticipated well temperature and pressure to which it may become exposed to plus a well kill margin;

c) be capable of pressure testing and function testing;

d) ensure no single failure of either well barrier or well barrier element whether caused by operator error or equipment failure can lead to loss of personal safety or well control;

e) operate reliably and withstand the environment to which it may be exposed over time.

Deviation from the above requirements shall be documented, risk assessed and mitigated prior to selecting the equipment as a barrier. The primary and secondary well barriers, to the extent possible, shall be independent. In the event independent barriers are not possible, and/or common well barrier elements exist, a risk analysis shall be performed and risk- reducing/mitigation measures applied to control the well and manage, health, safety and the environment.

Well barriers shall be identified in one of two classes:

— intervention equipment barriers brought to the wellsite;

— in-situ barriers (completion equipment barriers already in place).

Barrier element identification shall be included in hazard and operability studies/hazard identification (HAZOP/HAZID) exercises. If in-situ barrier elements are intended to be actively used during operations, qualification testing results shall be available to demonstrate that these in-situ barrier elements are capable of performing their required function in accordance with API 17G requirements.

NOTE 1 Typically where the primary barrier envelope extends to the surface tree, the secondary barrier envelope terminates at the subsea isolation device, such that in the event of loss of station the well barriers are at the sea floor.

NOTE 2 Details regarding barrier philosophy, number, type, testing, and management to prevent loss of well control are given in section 6. General guidance on barrier philosophy can be found in NORSOK D-010.

4.7 Risk Assessment

End user or third-party system integrator is responsible for risk assessment utilizing their risk ranking criteria regarding well operations and specific operations that have an effect on the well intervention system. The risk assessments shall be performed at defined and appropriate stages of design, manufacture, installation and operation.

NOTE 1 An initial system level risk assessment is recommended early in the intervention system selection/definition process to identify specific interfaces and events which dictate specific barrier requirements and timing. The risk assessment should identify events that would trigger additional system component verification, validation or changeout. This is recommended for use of existing systems as well as new designs.

Identified risks shall be mitigated so as to:

— prevent unacceptable risk to personnel safety, the environment, and to loss of capital assets;

— meet local regulatory requirements.

The risk assessments shall include applicable systems as follows:

— the subsea well architecture, conditions, fluids and associated properties, e.g., H_2S, hydrates, waxes, asphaltenes.

— Planned and contingent operations including normal, extreme and survival events

— surface vessel Information.

— environmental conditions;

— system interfaces as defined within the interface management plan.

The risk assessment shall identify failure modes, critical interfaces, unsafe operations, or activities which could cause a hazardous condition. Additionally, the risk assessment shall identify required risk reduction measures. The risk assessment shall demonstrate that the well can be secured at any time during the planned and contingent operations and demonstrate that no single failure either human error or equipment failure will lead to a personal safety or loss of well control event.

NOTE 2 - Guidelines for performing qualitative risk assessment can be found in ISO 17776, ISO 31010 and API RP 597.

A risk assessment shall be performed and documented for the following:

a) during selection of the system;

b) during planning of operations;

c) execution of operations:

   — when changing from one operation to another;

   — performed by new or modified vessel or installation;

   — using new or modified equipment;

— when changing service providers;
— that are considered hazardous.

4.8 Safety Strategy

4.8.1 General

The safety strategy defines the system capability (functionality), performance, reliability, and verification requirements to achieve a “Safe State” for hazard mitigation and risk reduction for a well intervention project or life of field activities. The Safety Strategy is developed in stages and is reviewed for each project, taking into account the interaction and interfaces between the specific subsea well intervention system, a specific vessel, well and well operations in defined environmental conditions.

The primary Safety Strategy objective is to ensure well control and system integrity is not compromised for the specified normal, extreme, and survival conditions such that two barrier elements are available in the event of safety function actuation. Events with the potential to escalate are managed through protection layers and identified in the risk assessment process such that the system results in a safe-state condition to any single failure that could have the consequence of uncontrolled discharge of the wellbore fluids to the environment.

The end user shall verify that the system meets the specified safety performance level based on specified well conditions, planned operating profile, and risk mitigation criteria.

The safety strategy development is applicable to new build and existing systems, Refer to Figure 8 for guidance on the development and maintenance of the safety strategy and refer to Figure 9 for the typical protection layers for subsea well intervention systems.

The Safety Strategy shall utilize the specified safety principles, design principles and operational principles to demonstrate a fit for purpose evaluation.

System Definition shall be an input to the Safety Strategy, see Figure 7.

The safety strategy shall include the following activities:

— System risk assessment, including cause and effect review;

— Identification of the needed risk reduction measures;

— Identification and specification of protection layers eliminating or alerting of a specific condition;

— Development and implementation of safety controls and required safety functions;

— Verification and validation of the effectiveness of the controls/procedures and safety functions against end user requirements.

The Safety Strategy shall specify the required monitoring systems to alert the operator of detectable safety function equipment failures and specify protection layers that are configured for the well-specific application.

The Safety Strategy development is applicable to new build and existing systems, Refer to Figure 8 for guidance on the development of the Safety Strategy and refer to Figure 9 for the typical protection layers for subsea well intervention systems.

Early Phase Establish a Basis of design for a new system or selecting a rental system. Apply experience from other projects/organizations and good judgement	Specify minimum available barrier elements, capabilities to shear relevant media and seal the well, protection layers, expected service conditions, shut under flowing conditions.
	Specify structural capabilities (complete a global riser analysis if required), establish vessel capability requirements such as riser compensating requirements, allowable load verification, watch circles, drive off/drift off, anchored, fixed or thrusters etc.
	Specify minimum timings to achieve Safe State (PSD, ESD, EQD)
	Overall system architecture capabilities (3rd party pump kick outs, vessel EDS, SIMOPS, vessel power outages, ROV capability on dead ship etc.
Mid Phase Contracting, detail design, operational planning	System definition (Basis of Design) including performance requirements for technical and operational safety elements
	Controls Design Basis
	GRA with Specific Vessel
	HAZID, HAZOP with well parameters and Met Ocean Conditions
	Operational Narrative (document's discussions around "what-ifs" and how the system is designed to respond)
	Identify hazards (cause and effect) that prevent securing the well at any time during the operation and assess risk using risk assessments
	Identify technical and operational risk reducing measures: Protection layers and supplementary requirements to the system context
Operational Phase Deployment	Documented Operational Guidance (Well specific operating criteria - WSOC)
	System P&IDs, and overall P&ID
	Equipment test and Crew drill plan
	Contingency Planning

Figure 8— Typical process for development of the Safety Strategy

The outputs of the Safety Strategy shall include as a minimum the following:

— Surface and Subsea Facilities
  - Definition of operator response to abnormal conditions;
  - Definition of operator response to accidental conditions.

— Normal control functions
  - Specification of what valves/rams are safety class and shear class;
  - Performance requirements (e.g., response times, reliability);
  - Architectural requirements (e.g., independence, redundancy);
  - Requirements towards interfaces between normal control system and safety functions;

- System configurations for operational scenarios (e.g., deployment, flowing, wireline, non-shearable equipment), including escalating to safety functions;
- Design requirements relating to:
  a. shut down logic;
  b. safety related software;
  c. safety system HMI (e.g., push buttons, indicator lamps, mode switches, etc.);
  d. energize or de-energize to trip for each safety function;
  e. start up or restart of safety functions;
  f. resetting each safety function after a shutdown (e.g., requirements for manual reset after shutdown);
  g. overrides/inhibits/bypasses, including how they will be cleared; e.g., ability or restrictions for online maintenance;
  h. cyber security, including of access for unintended or unauthorized changes.
- Monitoring, alarms etc.
  a. Requirements for monitoring of safety function equipment failure (e.g., accumulators, shut down panels).

— Safety functions
- Specify minimum required safety functions and sequencing, including other protection layers;
- Safe state of each safety function (minimum requirements are specified in Table 1 and Table 2);
- Automatic safe state upon loss of control (minimum requirements are specified in Table 3);
- response to specific failure modes (e.g., single failures, structural failures, functional failures);
- Method of safety function initiation (e.g., manual, automatic, autonomous, initiation by external systems);
- Frequency of testing of the safety functions during operations to ensure reliability and availability;
- Requirements for secondary/back-up functions to safety functions.

— Physical protection
- Requirements for secondary/back-up functions to safety functions.

4.8.2 Protection layers

The need for protection layers is be based on the system risk assessment conducted in accordance with the Safety strategy and System Review. Typical protection layers for subsea well intervention operations are shown in Figure 9. The intent of the identified protection layers is to reduce the probability and consequences of failures, hazards, and accidental events.

Protection layers may be either prevention layers to reduce the likelihood of a hazardous event occurring, or mitigation layers to lessen the consequences of a hazardous situation after it has been identified or has already occurred.

There should be independence between protection layers to ensure that the integrity of one protection layer is not compromised by another.

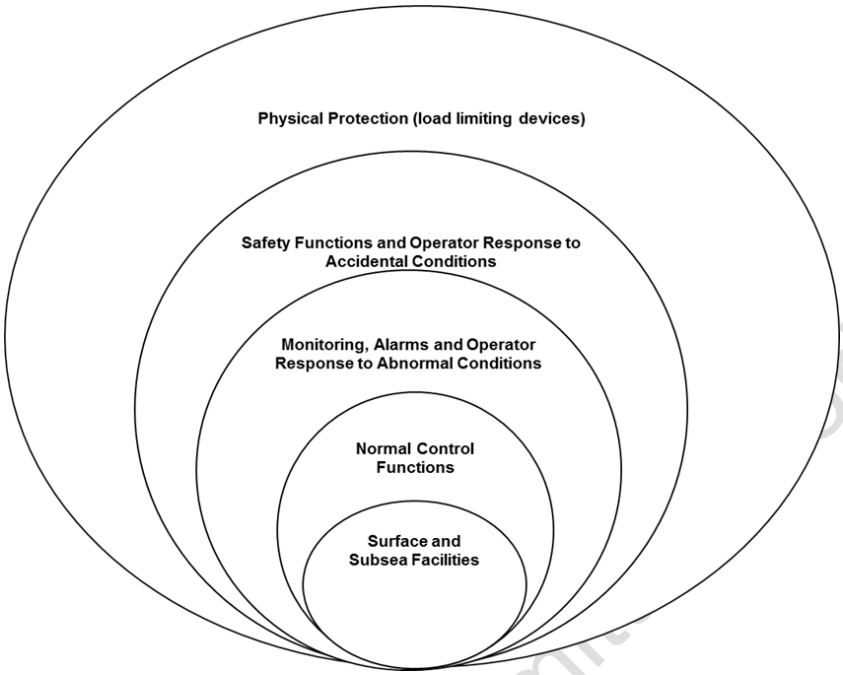

Figure 9— Typical Protection Layers for Subsea Well Intervention Systems

The following are examples of typical protection layers in subsea well intervention systems:

1ST LAYER Surface and subsea facilities e.g., surface and subsea facilities designed in accordance with industry codes and standards, application of design factors and levels of redundancy to ensure safe design and operation, sizing of pressure containing equipment, double barrier element principle, avoidance of single failures.

2ND LAYER Normal control functions e.g., control of subsea intervention system valves, rams and connectors, control fluid pressure regulation, interlocks.

3RD LAYER Monitoring, alarms and operator response to abnormal conditions e.g., riser tension, riser loading, pressure, temperature, accumulator pressure, UPS voltage, HPU pump output pressure.

4TH LAYER Safety functions and operator response to accidental conditions e.g., PSD, ESD, EQD, deadman functionality, autoshear functionality.

5TH LAYER Physical protection e.g., load limiting devices, safety joints, weak links.

4.8.3 Safety functions

The safety functions for subsea well intervention systems typically include:

— process shut down (PSD), isolate well topside;

— emergency shut down (ESD), isolate well subsea;

— emergency quick disconnect (EQD), isolate well subsea and disconnect from the well;

— deadman functionality, automatically isolate well subsea upon the loss of control;

— autoshear functionality, automatically isolate well subsea in the event of an unplanned disconnect.

Minimum requirements towards safe state for safety functions are specified in Table 1 and Table 2.

Tables 1 and 2, specify the minimum requirements for safe state of the safety functions, however the safety strategy will define the safety functions required for operations.

Table 3 specifies the minimum requirements towards safe state conditions for well control devices following loss of control.

NOTE The EQD function within the LWRP and SSTTA is a safety function that can be activated to limit load. However, other physical protection (load limiting devices; weak links and safety joints) may be included to augment reaction time or address a particular threat to the subsea well intervention system's integrity in the event that EQD fails to operate.

Table 1—Minimum Safe State for Safety Functions – OWIRS

Safety Function	Barrier and Surface Facility Safe Sate	Description of Safety Function	Operational scenarios	Intervention System Safe State
PSD	— Shut down well test skid — Isolate well topside. — Establish primary well barrier.	Isolate C/WO workover riser topside by closing surface tree wing valve(s)	— Well test / flowing — Wireline — Wireline/Coiled Tubing — Multiple work strings — Non-shearable equipment across barriers	Closed surface tree wing valve(s)
ESD [a]	— Isolate well subsea — Establish secondary well barrier	Isolate C/WO workover riser from the well/reservoir by closing the WCP well control devices in production bore, annulus bore, crossover loops and injection system	— Well test / flowing — Wireline [f] — Wireline/Coiled Tubing [g] — Multiple work strings[h]	Well isolated by WCP [c]
			Non-shearable equipment across barriers	Compensating measures in accordance with section 6.2.1.4
EQD [b e]	— Rig systems ready for recoil — Disconnect surface vessel from secondary well barrier	Disconnect the EDP connector from the WCP or TRT connector from subsea tree	— Well test / flowing — Wireline [f] — Wireline/Coiled Tubing [g] — Multiple work strings[h]	— C/WO riser isolated by retainer valve [d] — Well isolated by WCP or subsea tree [c e] — EDP disconnected from WCP
			Non-shearable equipment across barriers	Compensating measures in accordance with section 6.2.1.4

[a] ESD shall initiate PSD unless otherwise specified in the safety strategy. Activation of PSD shall not prevent activation of ESD or EQD.

[b] EQD shall initiate PSD and ESD unless otherwise specified in the safety strategy. Activation of PSD or ESD shall not prevent the activation of EQD.

[c] During intervention activities, there shall be the capability of cutting CT, braided WL and slickline, and post shear seal the wellbore. End user is responsible to ensure that the shear capacity is validated to meet project specific requirements in accordance with API 17G.

[d] It shall be stated in the safety strategy whether the retainer valve shall be validation tested for shearing wireline and coiled tubing.

[e] A minimum of one barrier element in production bore and annulus bore shall be closed prior to EQD disconnect. Interlocks shall not prevent disconnect.

[f] WCP shall either include wireline class, wireline/coiled tubing class, or safety head class well control device(s) validated to meet project specific requirements in accordance with API 17G Annex H.

[g] WCP shall include either wireline/coiled tubing class or safety head class well control device(s) validated to meet project specific requirements in accordance with API 17G Annex H.

[h] WCP shall include safety head class well control device(s) validated to meet project specific requirements in accordance with API 17G Annex H.

Table 2—Minimum Safe State for Safety Functions – TBIRS

Safety Function	Barrier and Surface Facility Safe State	Description of Safety Function	Operational scenarios	Intervention System Safe State
PSD	— Shut down well test skid — Isolate well topside. — Establish primary well barrier.	Isolate landing string topside by closing surface tree wing valve(s)	— Well test / flowing — Wireline — Wireline/Coiled Tubing — Non-shearable equipment across barriers	Closed surface tree wing valve(s)
ESD [a]	— Isolate well subsea. — Establish primary well barrier [g]	Isolate landing string from the well/reservoir by closing the SSTT valves in production bore	— Well test / flowing — Wireline [f] — Wireline/Coiled Tubing[f]	Well isolated by SSTT [c]
			Non-shearable equipment across barriers	Compensating measures in accordance with section 6.2.1.4
EQD [b] [e]	— Rig systems ready for recoil — Disconnect surface vessel from primary well barrier	Disconnect the SSTT latch from the SSTT	— Well test / flowing — Wireline [f] — Wireline/Coiled Tubing[f]	— Landing string isolated by retainer valve [d] — Well isolated by SSTT [c] [e] — SSTT latch disconnected from SSTT
			Non-shearable equipment across barriers	Compensating measures in accordance with section 6.2.1.4
Drilling Riser Emergency Disconnect Sequence (EDS) [j]	— Rig systems ready for recoil — Isolate well subsea. — Establish secondary well barrier	Shear SSTTA shear sub [h, i]	— Well test / flowing — Wireline — Wireline/Coiled Tubing	Well isolated by subsea drilling BOP

[a] ESD shall initiate PSD unless otherwise specified in the safety strategy. Activation of PSD shall not prevent activation of ESD or EQD.
[b] EQD shall initiate PSD and ESD unless otherwise specified in the safety strategy. Activation of PSD or ESD shall not prevent the activation of EQD.
[c] During intervention activities, there shall be the capability of cutting CT, braided WL and slickline, and post shear seal the wellbore. End user is responsible to ensure that the shear capacity is validated to meet project specific requirements in accordance with API 17G.
[d] It shall be stated in the safety strategy whether the retainer valve shall be shear or shear seal class in accordance with API 17G Annex G.
[e] A minimum of one barrier element in production bore and annulus bore (if applicable) shall be closed prior to EQD disconnect. Interlocks shall not prevent disconnect.
[f] It shall be stated in the safety strategy whether the SSTT primary shear valve shall be shear or shear seal class in accordance with API 17G Annex G.
[g] The SSTT valves are back-up elements in the primary well barrier, i.e., the SSTT valves will constitute the upper closure device in the primary well barrier after disconnect when the DHSV is not available.
[h] End user shall specify risk reducing compensating measures (e.g., SSTT EQD, closure of LMRP annular preventer prior to shearing of shear sub, only operations from killed wells etc.) as part of risk mitigation.
[i] End user is responsible for qualification shear trials of the SSTTA shear sub in accordance with API 17G.
[j] EDS sequencing and anticipated disconnect scenario shall be specified by end user in the Safety Strategy.

Table 3—Automatic Safe State for Well Control Devices Following Loss of Control

Event	Well control device	Barrier safe state	Operational scenarios	Intervention system safe state
Loss of control while connected subsea	Surface tree	— Automatic isolation of well topside. — Establish primary well barrier.	— Well test / flowing — Wireline — Wireline/Coiled Tubing — Multiple work strings — Non-shearable equipment across barriers	Closed surface tree fail-close wing valve(s)
	LWRP	— Automatic isolation of well subsea [a] — Establish secondary well barrier	— Well test / flowing — Wireline — Wireline/Coiled Tubing — Multiple work strings	— Well isolated by WCP fail-close well control devices [c] — EDP connected — Retainer valve, see API 17G
			Non-shearable equipment across barriers	Compensating measures in accordance with section 6.2.1.4
	SSTTA	— Automatic isolation of well subsea [a] — Establish back-up secondary well barrier to the drilling riser BOP	— Well test / flowing — Wireline — Wireline/Coiled Tubing	— Well isolated by SSTT fail-close valves [c] — SSTT latch connected — Retainer valve, see API 17G
			Non-shearable equipment across barriers	Compensating measures in accordance with section 6.2.1.4
Unintentional C/WO riser or landing string disconnect	LWRP	— Automatic isolation of well subsea [a] — Establish secondary well barrier	— Well test / flowing — Wireline — Wireline/Coiled Tubing — Multiple work strings	— Well isolated by WCP fail-close well control devices [c] — EDP connected — Retainer valve, see API 17G
			Non-shearable equipment across barriers	Compensating measures in accordance with section 6.2.1.4
	SSTTA	— Automatic isolation of well subsea b — Establish back-up secondary well barrier to the drilling riser BOP	— Non-shearable equipment across barriers	— Compensating measures in accordance with section 6.2.1.4
			Non-shearable equipment across barriers	Compensating measures in accordance with section 6.2.1.4

[a] Deadman functionality shall ensure automatic subsea isolation following loss of control.
[b] Autoshear functionality shall ensure automatic subsea isolation following unintentional disconnect.
[c] Well control devices that require stored power to isolate well for applicable operational scenarios following loss of control shall be equipped with subsea power storage independent of top side supply.

4.8.4 Management of systems in service

Clear lines of responsibility shall be defined for managing safety systems in service.

Procedures for verifying the performance of safety functions and maintaining the system(s) in operation shall be established during system integration testing. Once the system is verified during system integration testing this will be the baseline for the performance of the system in service. These procedures shall include monitoring of performance in service, during testing and maintenance.

The following are examples of activities related to the management of systems in service:

— periodic testing (Refer to section 8);

— identify, manage, Log and report of safety function and component failures used in the Section 9, system condition summary;

— management of interlock functionality and override procedures;

— management of potentially hazardous operating situations (e.g., non-shearables across the barriers);

— management of change.

4.8.5 Use of a Safety Instrumented System as a Protection Layer

Section 4.8.5 is only applicable to SIL rated systems.

For end user defined applications where the safety strategy requires a Safety Instrumented System (SIS) as an independent protection layer, the safety requirements specification shall define the requisite Safety Instrumented Function (SIF) and respective Safety Integrity Level (SIL). When a human action is a part of an SIS, the availability and reliability of the operator action shall be specified in the SRS (Refer to Annex A) and included in the performance calculations for the SIS. See IEC 61511-2 and or ISA-TR84 Annex B, for guidance on how to include operator availability and reliability in SIL calculations.

The final element shall be included in the safety instrumented function's SIL calculation.

NOTE 1 For instances of no or limited data, refer to API 17N, Annex F for application of validation data for estimating the failure on demand.

NOTE 2 Guidance for SIL rated systems is covered in Annex A.

4.9 System Design

4.9.1 General

System design shall be based on the requirements communicated by the safety strategy. In the event of a conflict between this document and a relevant law or regulation, the relevant law or regulation applies to the extent necessary to achieve full compliance.

The system design shall be defined in terms of (as a minimum):

a) new subsea well intervention equipment shall meet API Standard 17G;
b) equipment design specifications: Pressure, temperature, drift and configuration;
c) component and system drawings;

d) material selection;
e) specific data (e.g., load capacity, etc.) required to perform global riser analysis;
f) IWOCS function characteristics, see API 17G5;
g) verification and validation plan;
h) identification and assessment of external interfaces.

Existing equipment used in a well intervention system shall be built in accordance with a recognized industry standard that was in effect at the time of the equipment's manufacture. Use of equipment in a well intervention system not complying to API 17G shall be gapped assessed against the 17G standard, those gaps risk assessed and risk mitigated prior to use in the system.

NOTE Equipment design (combined loading, shear capacity) in existing systems built to other recognized industry standards may not take into account intervention loading requirements.

Welding of wellbore pressure containing, pressure controlling, and/or load-bearing components shall involve a written Weld Procedure Specification (WPS) with supporting Procedure Qualification Records (PQRs) written and qualified in accordance with ASME BPVC, Section IX, Article II.

Subsea bolting shall conform to API Std 17G.

Modifications, alterations, or adjustments to the original design or intent of the subsea well intervention system shall be documented including functional, structural or interface changes. The altered system shall be reviewed as per this document.

4.9.2 System Functional & Design Requirements

The system functional requirements shall (as applicable for the mode of operation):

a) allow well completion, well testing, well kill, well isolation, well servicing with wireline, and coiled tubing access;

b) provide a conduit from the individual bores of a subsea tree or tubing hanger to the surface vessel;

c) allow passage of fluid and tools through bore(s) of the subsea tree/tubing hanger from the workover vessel as defined in system design basis;

d) provide a conduit to contain all fluids for the application and permit their circulation to and from the wellbore;

e) act as a guide for all tools and equipment run into or pulled out of the wellbore;

f) provide the means for connecting workover riser equipment together in a safe and efficient manner on the drill floor or designated work area;

g) serve as a running string for installation and retrieval the subsea tree;

h) serve as a running string for installation and retrieval of the tubing hanger;

i) allow for running the landing string or C/WO riser through the drilling riser and subsea drilling BOP system;

j) allow for running the C/WO riser through open sea;

k) provide a means for connecting control lines to the subsea tree or tubing hanger running tools;

l) provide a means for returning the well to a safe state in the event of an emergency.

4.9.3 System Structural Requirements

4.9.3.1 General

The following requirements shall be included in the system design:

a) risk assessments (e.g., HAZID, HAZOP etc.) and design reviews shall be used to identify loading conditions and operating conditions, see ISO 17776 for guidance;

b) the weakest failure point in the system shall be above the subsea barrier elements (e.g., LWRP and SSTT, wellhead, and XT);

c) following survival events, permanent equipment and subsea well barriers shall maintain functionality and retain full pressure integrity;

d) load limiting devices (e.g., safety joints, weak links) may be used to prevent loss of integrity of the subsea well intervention system and well barriers in case of overloading due to survival loads;

e) normal, extreme or survival loads shall not exceed the structural load capacity of components and equipment designed and manufactured in accordance with either; API 6A, API 16A, or API 17D;

f) operating limitations for the subsea well intervention system shall be established by global riser analysis for all relevant failure modes;

g) operating limitations shall ensure integrity of the barrier envelope for pressure-containment and minimize risk to personnel and to the environment, taking into account environmental conditions and identified accidental events;

h) IWOCS simulation analysis shall be used to validate functional performance of safety functions.

The subsea well intervention system shall:

— be designed to maintain pressure integrity and remain functional for all relevant loading conditions;

— be designed such that no accidental event identified in a risk assessment can compromise well barriers.

4.9.3.2 Global Loads for Design

The global loads for design shall be established by global riser analysis. Guidance for conducting the GRA is provided in Section 5.

All operational sea-states for the applicable period shall be included in determination of the global loads.

Dynamic loads shall be extracted from analysis as the most probable maximum values for the environmental conditions under consideration, for the applicable period. Alternative methods can be used if they are proven to result in sufficiently conservative comparable values.

Static global loads shall be included in load case simulation.

The global loads for design shall be the sum of static and dynamic loads.

4.9.3.3 Fatigue Loads

4.9.3.3.1 General

The manufacturer/designer shall provide the fatigue load capacity, including guidance on maintenance and inspection. The end user shall ensure that the equipment is suitable for the intended application, including assessment of the adequacy of the remaining fatigue life.

4.9.3.3.2 Fatigue loads

The manufacturer shall provide the fatigue load capacity for the equipment. This shall be in accordance with API 17G, Annex D for all Well Intervention Equipment in the system.

The service life of the equipment (refer to Equation 1) for the operational loads shall be determined using a GRA. Guidance for conducting the GRA is provided in Section 5.

The end user shall ensure that the prior history of fatigue loads/damage is taken into consideration when determining the equipment's remaining service life.

End user shall ensure that there is a process in place to ensure that system is not operated outside the operational limits for fatigue loading.

a) Operational limits from fatigue loads should be captured in clear, easy to read charts;

b) Any exceedance of the operating limits for fatigue loading shall be recorded and implications for further use of the equipment/system shall be investigated prior to continuing operations.

Operators shall be trained in the use of the equipment/system and in recognizing unplanned events and the required course of action if they happen.

4.9.3.3.3 **Fatigue Inspection**

End user shall ensure that a fatigue inspection plan is generated to inspect the relevant equipment for fatigue damage identified by the global riser analysis. The inspection should be as manufacturer's inspection procedure.

Typical formula for setting the inspection interval is provided in Equation (2):

$$\text{Service life} \leq \frac{\text{Fatigue life}}{D_{F\_d}} \tag{1}$$

$$\text{Inspection interval} \leq \frac{\text{Fatigue life}}{D_{F\_i}} \tag{2}$$

Alternative methods to Equations (1) & (2) shall be based on a recognized structural reliability method such as DNVGL-RP C210.

Fatigue design factors (wave effects) shall be in accordance with Table 4. For fatigue design factors due to vortex-induced vibration, guidance is given in DNVGL-RP-F204 and API 2RD.

NOTE DNVGL-RP-C203 Figure 9-3 gives the fatigue failure probability as function of design fatigue factors for the S-N method.

Table 4—Fatigue Design Factors, DF

Fatigue analysis method	Design D_{F_d}	Inspection [c] D_{F_i}	Guidance
Method based on S-N (stress-life) [a]	3	10	DNVGL-RP-C203
Method based on fracture mechanics [b]	1.5	5	BS7910 DNVGL-RP C210 [d]

[a] The S-N method (stress-life) is based on S-N data determined by fatigue testing of welded details, smooth bars or representative notched bars testing of base material detail, and the linear damage hypothesis (miner sum).

[b] The fracture mechanics method is based on fatigue crack growth and failure defined as brittle (unstable) fracture, through-the-thickness crack, yielding of remaining section or buckling.

[c] The fatigue design factor assumes that fatigue cracks are not found in all previous inspections. Optimization of inspection intervals based on inspection history (not found, found and repaired fatigue cracks) can be performed by structural reliability analysis.

[d] It is recommended to perform a calibration of the fracture mechanics method to the S-N method (fatigue test data). A calibration methodology is presented in DNVGL-RP C210.

The inspection intervals up to reaching the service life should be based on the S-N method provided that non-destructive testing is performed in accordance with acceptance criteria for the applicable S-N curve (e.g., minimum detectable indication, probability of detection, surface finish etc.). If defects or cracks are detected during inspection within the equipment's service life, acceptance of the defect or crack shall be based on fracture mechanics to ensure that the crack will not propagate leading to unstable fracture. If the defects or cracks are accepted, subsequent inspection intervals shall be based on the fracture mechanics method.

If the defect or crack is repaired, the fatigue damage at the repaired location may be reset. Implications to the fatigue life from the repair (e.g., increased stresses from material removal at the defect) shall be considered. Fatigue damage at the other (non-repaired) locations stay the same as before.

Life extension and subsequent inspection intervals in excess of the service life shall be based on the results from the fracture mechanics method.

NOTE 1 Fatigue damage is cumulative.

NOTE 2 Guidance on extended fatigue life is provided in DNVGL-RP-C203

4.9.3.4 Global Load Combination and Conditions

The Well Intervention System shall be evaluated for single and combined loads as specified in Table 5 of API 17Gto ensure the equipment within the system is fit for service and to identify the weakest equipment within the system.

Static and GRA analysis is normally used to determine the loads on specific equipment which can then be compared against the equipment's load capacity to determine if the equipment meets the end user requirements for structural functional and service life.

4.9.3.5 End User Specified Design Load Format

Design load format including design factors for use in "End user specified" (See API 17G) oil country tubular goods (OCTG) and drill pipe product for landing strings and C/WO risers for subsea well intervention operations shall be as specified by end user.

Design format may be working stress design format, allowable load format (see API 17G) or a probabilistic approach based on recognized structural reliability analysis or the load and resistance factor design method.

Determination of end user specified design factors (inverse of safety factor) shall take into account the following:

a) Regulatory target reliability requirements;

b) Consequences of failure for all applicable component failure modes and operating conditions;

c) Probability of occurrence of normal, extreme and survival loading conditions;

d) Uncertainty in load and component load capacities;

e) Single load and combined load design for normal extreme, and survival conditions;

f) Global load combination and conditions.

4.10 Operational Requirements

Operational requirements shall include, risk assessment of the operations, including installation of the system, operation and maintenance. Operational requirements shall define the sequences for normal and safety function activation required to secure and as required disconnect from the well.

Refer to section 6 of this document for detailed requirements.

4.11 System Review

System reviews shall be performed, on the overall system and include the following:

a) verification of compliance with the safety strategy;

b) compliance to identified risk reducing measures;

c) compliance to specified protection layers;

d) compliance to SRS requirements, where SIL is required;

e) verification of SIT results;

f) approval of the operational guide.

4.12 Requirements for Personnel Qualifications

Personnel responsible for well control during normal, contingency and emergency subsea well intervention system operations shall have relevant well control training and certification, in accordance with regulatory standards.

The end user in conjunction with the contracted service provider shall define roles (including emergency procedures), responsibilities, and lines of communication required to operate the system in accordance with the requirements of this document.

4.13 Documentation, Records, and Traceability

Documentation required to ensure that operations of the subsea well intervention system are carried out in accordance with API RP17G1 shall be prepared. The documentation shall be available during the different phases, e.g., design, manufacture, fabrication, operation, and storage. Requirements and criteria related to equipment and components of significance to safety shall be specified. The documentation shall include a description of the testing and the maintenance required to maintain the system during storage and operations. All documentation requirements shall be reflected in a document register.

Documentation shall be available to the end user or the end user's agents. Submittals and/or approval procedures shall be agreed upon. The documentation shall be presented in a form that it is readily appropriate for review and verification. Design documentation shall include construction drawings, parts lists, and design calculations. Documents that are considered proprietary and confidential shall be available for review.

Records of the subsea well intervention system shall be kept and maintained to demonstrate compliance with the requirements of API 17G (or design codes used at time of design and manufacture) and RP17G1 throughout its design life by the owner of the system.

There shall be traceability for all relevant data with significant influence on the safety and operational capability of the subsea well intervention system throughout its design life, by the owner of the equipment.

5. Global Riser Analysis

5.1 General

The purpose of section 5 is to identify the information required to conduct the analysis (inputs) and interpret the results of the analysis (outputs) to determine if the system meets the structural and service life requirements as specified in section 4.

The document addresses GRA for the following types of subsea well intervention systems:

— Open water intervention riser system (OWIRS)

— Through-BOP intervention riser system (TBIRS)

— Subsea pumping well intervention system (SPWIS)

— Riserless subsea well intervention system (RSWIS)

5.2 Data to Serve as Inputs

5.2.1 Surface vessel data

The drilling contractor/vessel owner is responsible for providing the following surface vessel data:

a) Vessel type and class

b) Deck elevations

c) Vessel motion characteristics (RAOs and associated definitions)

d) Vessel drift coefficients

e) Riser tensioning system characteristics

f) Motion compensator stroke limit

g) Vessel offset envelope for moored vessels

h) Station keeping capabilities for DP vessels

i) Top drive / CMC data

5.2.1.1 Riser data (for TBIRS)

a) Joint stack up arrangement

b) Standard joint data sheets

c) Joint dimensions

d) Joint materials

e) Joint lengths and weights (in air and in seawater)

f) Specialty joint properties

g) Buoyancy module data

h) Flex joint data

i) LMRP and BOP arrangements, weight and dimensions

j) Connector structural and functional capacities and fatigue data

5.2.2 Metocean data

The end user (operator) is responsible for providing the following metocean data:

a) Wave scatter diagram (long term seastates data – omni-directional or with directionality)

b) Extreme wave data

c) Current profiles

d) Long term and extreme current speeds

e) Tidal variation and/or storm surge

f) Wind speed data

5.2.3 Project-specific (or site-specific) data

The end user (operator) is responsible for providing the following project/site specific data:

a) Geotechnical data or P-Y curves

b) Water depth

c) Anticipated fluids (e.g., hydrocarbons, brine) weight / density

d) Operating temperatures

e) Maximum anticipated shut-in pressure at the Wellhead

f) Maximum anticipated pressures at the Wellhead during operations (flowing, pressure test, etc.)

g) Well schematic and casing data

h) Cement levels

i) Wellhead / Tree and or / Tubing Head Spool stackup, connector capacity, general assembly drawing

j) Subsea architecture topography/elevations, as relevant to disconnected intervention system conditions

5.2.4 Subsea well intervention system data

The system integrator (OEM) is responsible for providing the following intervention system data:

a) Space-out

b) String layout and stackup

c) Component dimensions

d) Component material properties

e) Connector types and structural capacities

f) Connector angle or bending limits for safe release / disconnect

g) Connector fatigue data (SAFs or ΔM-N curves)

h) Joint lengths and weights (in air and in seawater)

i) Details of umbilicals and clamping arrangement including dimensions and weights

j) Centralizer locations, dimensions and weights

k) Details of rotary bushings and weights

l) Details of surface equipment (e.g., surface flow tree, coiled tubing lifting frame etc.)

5.3 Analysis Basis

An analysis basis shall be established by either the manufacturer or service provider. The end user, system integrator and OEM's shall be responsible for providing the input data for their respective equipment and assets.

The analysis basis shall include the following as a minimum:

a) Analysis objectives and scopes of work;

b) Applicable codes and standards;

c) Proposed software packages and versions;

d) Analysis methodology for each scope;

e) Load case matrix for each analysis scope including any sensitivities analysis;

f) Details of intermediate calculations with raw data to generate input data (hydrodynamic diameters, adjusted hydrodynamic coefficients for non-circular sections, current velocity reductions (if applicable) etc.);

g) List of assumptions;

h) List of modelling uncertainties and derivation of ranges for sensitivity analysis;

i) Design and/or acceptance criteria for each analysis scope.

5.4 Guidance on Loading Classifications and Load Cases

GRA of subsea well intervention systems commonly consider three loading classifications: normal, extreme, and survival. A loading classification must be specified for each operation type (or scenario) within all operational stages. Acceptance criteria for various checks / analyses is typically unique for each loading classification.

Loads generated by the weight of the components and environmental loads are applicable for all loading classifications. Any survival load experienced by the riser should be evaluated as a survival loading classification.

Refer to API 17TR14 for further guidance or assistance regarding the topics listed below. Guidance is given for each type of subsea well intervention system.

— Defining the system loading classification for each operation type/scenario should be based on its expected duration (and probability of occurrence, ensuring the service life of the components are managed);

— Based on the results from above, defined load cases with sensitivity studies should be considered.

5.5 Scope of Checks and Analysis Performed

5.5.1 Minimum requirement

a) Estimation of required top tension

b) Checks of Down-stroke (or Up-stroke) Requirements

c) Operability assessment of connected operations

d) Operability assessment of disconnected operations

e) Loss of position assessment

f) Estimation of watch circles, if applicable

g) Weak point analysis

5.5.2 Others to be included for some applications

a) Additional screening tasks

b) Recoil response following an emergency disconnect

c) Wave and VIV fatigue assessment

d) Determine fatigue loads applied to the subsea well

e) Stability assessment of free-standing well

5.6 Outputs

5.6.1 Minimum Requirements

5.6.1.1 Estimation of required top tension

The objective of this task is to identify a preliminarily range of tension settings applied near the top of the intervention/workover riser system during connected operations. The output should be initial estimates for both of the following:

— minimum value of applied mean tension (or mean overpull) for each riser contents, and

— maximum value of applied mean tension (or mean overpull) for each riser contents.

These are then used as a starting point for subsequent assessment types (e.g., operability or fatigue assessments). For an OWIRS having a tension share arrangement, separate values should be provided for both the top-drive compensation system and the riser tensioning system used.

5.6.1.2 Checks of Down-stroke (or Up-stroke) Requirements

The objective of this task is to identify a range of mean space-outs for the upper intervention/workover riser such that all acceptance criteria (e.g., change of travel/stroke for compensation/tensioning systems, minimum vertical clearance to rig obstructions) are satisfied during connected operations. As such, the output of this check is typically both of the following limits assuming the rig/vessel is on-location:

a) lowest and highest values for mean space-out of upper riser, and

b) limits for available down-stroke and up-stroke (when on-location) during various seastates.

Examples of supplementary outputs from these checks of connected operations include:

— schematics showing elevations of upper riser components for both the lowest and highest values for mean space-out

— relationships between various ways of expressing stroke/space-out considerations (e.g., elevation for reference point along riser, vertical distance/clearance from possible obstructions, travel/stroke of a compensation/tensioning system).

5.6.1.3 Operability assessment of connected operations

The objective for an operability assessment of connected operations is to determine the recommended operating windows such that all acceptance criteria defined for system responses (e.g., displacements, loads, stresses) are satisfied. The output of this assessment should be recommended operating windows for each operation type (during the connected operational stage) and all applicable sets of operating parameters. These are commonly expressed as combinations of:

a) applied mean tension (or mean overpull),

b) limits for mean vessel position/offset in the up- and down-current directions, and

c) environment (e.g., seastate, current).

Examples of supplementary outputs from operability assessments of connected operations include:

— Tension-offset envelopes (TOEs) based on governing acceptance criteria for a given environment. The vertical axis could be applied mean tension or intended (mean) overpull.

— environment envelopes based on governing acceptance criteria for a given applied mean tension

— variation of system responses as a function of mean vessel offset for a selected combination of applied mean tension and environment

— For TBIRS, limits for maximum flex joint angles (of the marine drilling riser).

5.6.1.4 Operability assessment of disconnected operations

The objective for an operability assessment of running/retrieval storm hangoff operations is to determine the recommended operating windows such that all acceptance criteria defined for system responses (e.g., displacements, loads, stresses) are satisfied.

The output of this assessment is recommended operating windows for each selected combinations of operational stage, operation type, and all applicable sets of operating parameters. These are commonly expressed as combinations of:

a) range of deployment depths

b) environment (e.g., seastate, current)

c) surface pressure, if any (such as during pressure testing), and

d) vessel transit speed/direction, if any.

Examples of supplementary outputs from operability assessments of running/retrieval operations include:

— environment envelopes based on governing acceptance criteria applicable for a range of deployment depths

— variations in topsides systems hangoff location and types (e.g., drawworks bails/elevator, drill floor fixed slips, drill floor gimble, etc.) for the depth for a selected environment

— variation of system responses as a function of deployment depth for a selected environment

— variation of system responses as a function of vessel transit speed/direction for a selected combination of deployment depth and environment

— For TBIRS, limits for maximum flex joint angles (of the marine drilling riser)

— For TBIRS, pull-out and set-down forces required to overcome contact loads at critical flex joint angles.

5.6.1.5 Loss of position assessment

The objective for this assessment is to determine the mean vessel offset at which the first limit (of the defined set of acceptance criteria) is reached when the rig/vessel experiences a loss-of-position event during connected operations. The output of this assessment is the following:

— mean vessel position/offset limit.

This output should be determined for each operation type (during the connected operational stage) and all applicable sets of operating parameters. Moreover, this limit can be given for combinations of applied mean tension (or mean overpull) and environment (e.g., seastate, current).

Examples of supplementary outputs from loss of position assessments for connected operations include:

— Tension-offset envelopes (TOEs) based on governing acceptance criteria for a given environment. The vertical axis could be applied mean tension or intended (mean) overpull.

— environment-offset envelopes based on governing acceptance criteria for a given applied mean tension

— variation of system responses as a function of mean vessel offset for a selected combination of applied mean tension and environment.

5.6.1.6 Estimation of watch circles, if applicable

The objective for this assessment is to estimate watch circles for connected operations when operations are performed from a rig/vessel that is dynamically positioned. The output of this assessment is the following:

— radius/distance and corresponding time for the POD (or black circle), the red watch circle, and if applicable, the yellow watch circle

This output should be determined for each operation type (during the connected operational stage) and all applicable sets of operating parameters. Moreover, this output can be given for combinations of applied mean tension (or mean overpull) and environment (e.g., seastate, current).

Examples of supplementary outputs from the estimation of watch circles (for connected operations) include:

— initial mean vessel position/offset that estimated watches are applicable for

— vessel trajectory for the assumed loss-of-position event.

5.6.1.7 Weak point analysis

The objective for a weak point analysis is to identify potential “weak points” in the connected system under large mean vessel positions/offsets, which are assumed to occur during a loss of position event in conjunction with failure of the EQD (emergency quick disconnect) to release promptly as part of an attempted emergency disconnect. The output of this assessment is the following:

— identification of the first limit to be exceeded, as well as the corresponding mean vessel offset/position that this occurs.

This output should be determined for each operation type (during the connected operational stage) and all applicable sets of operating parameters. Moreover, this output can be given for combinations of applied mean tension (or mean overpull) and environment (e.g., seastate, current).

Examples of supplementary outputs from weak point analysis (for connected operations) include the following:

— identification of the second limit to be exceeded, as well as the corresponding mean vessel offset/position that this occurs.

— variation of system responses (or their utilization) as a function of mean vessel offset for a selected combination of applied mean tension and environment

— loads to be used for design of a purpose-built “weak link” (or safety joint” component within the subsea well intervention system, if applicable

— lateral displacements and inclination angles (or load(s) experienced) along the wellhead/casing system and subsea stack at the mean vessel offset/position that a limit is exceeded.

5.6.2 Supplementary Requirements

5.6.2.1 Recoil assessment

The objective for a recoil assessment of a planned or emergency disconnect is to determine the recommended operating windows such that all acceptance criteria defined for system responses (e.g., vertical displacement, minimum tension or slack, velocity) are satisfied. The output of this assessment is separate recommended operating windows for all applicable sets of operating parameters. These are commonly expressed as combinations of:

a) limits for applied mean tension or mean overpull,

b) seastate limit for a selected vessel heading or vessel heave limit, and

c) acceptable range of mean strokes/travels for the riser tensioning or top-drive compensation systems when rig is on-location.

Examples of supplementary outputs from recoil assessments of an OWIRS using a tension share arrangement include variations of the following system responses as a function of time after release/disconnect:

— stroke/travel of the riser tensioner or top-drive compensation system

— vertical displacement of EDP (or amount of vertical clearance) from its initial position

— tension experienced at locations along the intervention/workover riser

— tension (or amount of slack/jump-out) experienced by the riser tensioner

— velocity of the riser tensioner’s piston

— target overpull tension at EDP interface.

5.6.2.2 Wave and VIV fatigue assessment

The objective for Wave and VIV fatigue assessments is to estimate the fatigue damage experienced by the intervention/workover riser induced by waves/seastates and vortex-induced vibrations (VIV) of the riser caused by currents, respectively. Estimates for fatigue damage rates (or fatigue life) are typically given at selected fatigue critical locations along the intervention/riser (e.g., connectors, welds, changes in cross-sectional dimensions, lateral supports).

The output of fatigue assessment should include the following for each selected combinations of operational stage, operation type, and set of operating parameters:

a) maximum Wave fatigue damage rate (i.e., minimum Wave fatigue life) based on continuous exposure to a single event seastate

b) maximum Wave fatigue damage rate (i.e., minimum Wave fatigue life) based on long-term exposure (probability-scaled) to anticipated operational seastates

c) maximum VIV fatigue damage rate (i.e., minimum VIV fatigue life) based on continuous exposure to a single event current profile

d) maximum VIV fatigue damage rate (i.e., minimum VIV fatigue life) based on long-term exposure (probability-scaled) to anticipated operational current profiles.

Examples of supplementary outputs from Wave and/or VIV fatigue assessments of the intervention/workover riser include:

— natural frequencies/periods of the system (and associated mode shapes) from an eigenvalue assessment

— combined Wave/VIV fatigue damage rate (of combined Wave/VIV fatigue life) based on long-term exposure (probability-scaled) to environments, with appropriate safety factors applied

— distribution of Wave or VIV fatigue damage rate along the length of the intervention/workover riser for a single set of fatigue characteristics (e.g., based metal fatigue curve with assumed SAF=1.0)

— break-down of long-term cumulative Wave fatigue damage rate by each seastate bin (or long-term cumulative VIV fatigue damage rate by each current profile) at fatigue critical locations

— histograms of mean and dynamic loads (e.g., tension, bending moment, or stresses) experienced at fatigue critical locations

— For VIV fatigue assessments, distribution of drag amplification factor along the length of the intervention/workover riser for selected current profiles.

NOTE Fatigue damage accumulation predicted by a GRA for a planned operation may not account for prior damage in riser or other intervention string components. Load bearing components may have accumulated fatigue damage from prior jobs. Both sources of fatigue damage (prior and planned) should be considered before critical components are deemed safe for the duration of the planned operation.

5.6.2.3 Estimation of fatigue loads applied to the subsea well

The objective for estimation of fatigue loads as applied to the subsea well is to determine the loads transmitted from the intervention/workover riser onto the wellhead and conductor system induced by waves/seastates and VIV (bend cycles) of the riser caused by currents. The output of this assessment is the following:

— histograms of mean/dynamic loads (e.g., tension, bending moment) at a reference elevation or mean/dynamic stresses experienced at selected locations in the wellhead/casing system.

This output should be determined for each operation type (during the connected operational stage) and all applicable sets of operating parameters. Moreover, this output can be given for combinations of applied mean tension (or mean overpull) and environment (e.g., seastate, current).

5.6.2.4 Stability assessment of free-standing well

Free standing well stability assessment may include a variety of subsea hardware installed on top of wellhead depending on whether it's a containment scenario or a riserless well intervention. The objective of this study is to determine the integrity of a freestanding wellhead system once the intervention/workover riser is released. The outputs should include the following as a minimum:

a) Allowable installed conductor angle / wellhead angle / bullseye angle with subsea equipment installed;

b) Allowable bottom current speed based on strength and stability limits;

c) Allowable lateral loads / snag loads from jumpers or connected cables.

6. Operational Requirements

6.1 General

The purpose of this section is to define and ensure component selection and system design achieves barrier requirements and conforms with the agreed safety strategy.

The scope of Operational Requirements builds from system requirements in section 4 to provide guidance on procedures, how barriers are achieved and maintained during subsea well interventions with hydrocarbon bearing reservoirs and/or pressurized formation with potential to flow to mudline.

6.2 Requirements

6.2.1 Operational Requirements

For operations in wells with hydrocarbon-bearing reservoirs and/or pressurized formation with the potential to flow to the mudline, two independent and tested well barriers shall be available.

Before commencing well intervention operations:

— The end-user, or party designated by the end-user, shall confirm that the rated working pressure (RWP) of each barrier element shall meet or exceed the SITP, plus well kill margin.

— A documented risk assessment, and barrier philosophy shall be established and implemented consistent with Section 4.

The barrier philosophy shall demonstrate the interaction of the equipment functionality and the operational requirements.

6.2.1.1 Shear-sealing Devices

For a shear-sealing device to be considered as a barrier element, the device shall be validated as per API 17G or another applicable API document.

In the case of two devices, one shearing, and one sealing, the risk assessment shall document how potential cut debris or remaining obstruction is removed from the adjacent sealing device before its closure takes place. Shear consequences and risk mitigation plan shall be defined if debris is dropped downhole.

6.2.1.2 Well Barrier Selection and Principles

Well barriers to the environment shall be placed in one of two classes:

— intervention equipment barriers brought to the wellsite;

— in-well devices such as completion equipment barriers already in place.

Permanently installed subsea and downhole equipment may be part of the well intervention barrier plan. If in-situ barrier elements are intended to be actively used during operations as either primary or secondary barriers then original manufacturing validation testing results shall be available to demonstrate that these in-situ barriers elements are capable of performing their required function.

In-well barriers may be considered during the steps of the operation, either for immediate or delayed closure (i.e., mechanical overrides on tree valves or hydraulic trapped pressure on SCSSVs). Examples of in-well barriers are barriers in the completions such as SCSSVs or subsea production tree valves.

Two fail-close devices or other barrier elements in series between the production bore and environment and between the production tubing annulus and the environment shall be available at all times.

The well barriers shall be selected to:

— withstand the maximum anticipated well pressure to which it may become exposed to plus a well kill margin;

— be pressure tested and function tested or verified by other methods;

— ensure no single failure of a well barrier or well barrier element can lead to loss of well control

— re-establish a non-functioning well barrier or identify an alternative well barrier;

— operate reliably and withstand the environment for which it may be exposed to over time;

— have the physical location and integrity status of the well barrier element known during the operation.

Deviation from the above requirements shall be documented, risk assessed and mitigated prior to selecting the component as a barrier. The primary and secondary well barriers shall be independent of each other. The well barriers shall to the extent possible not have common well barrier elements.

In the event independent barriers are not possible, and/or common well barrier elements exist, a risk analysis shall be performed and risk- reducing/mitigation measures applied to control the well and manage, health, safety and the environment.

6.2.1.3 Well Barriers in Operation

For operations requiring mechanical entry into the well, the well barriers shall have at least one (1) barrier element that can shear and seal the workstring (or coiled tubing, wireline, etc.) used to enter the well. The well barrier(s) used for shearing shall be shear qualified to 17G for wireline class, wireline/coiled tubing class or safety head class. For legacy systems use API 16A for well barrier validation as appropriate.

Well barriers and well barrier elements shall be tested according to section 8.

If the shearing device will not seal after shearing, the following requirements shall be in place:

a) an unobstructed barrier element is available to seal;

b) ensure any obstruction to the barrier element will be removed to obtain the seal.

In the event of a failure or loss of a primary or secondary well barrier, immediate measures shall be taken to prevent escalation of the situation. The well barrier (or alternative) shall be established before activities or operations can be resumed.

If a shear function is performed the device(s) shall be function and pressure tested before being put back in service.

6.2.1.4 Management of Non-shearable Tools

If components in the workstring (e.g., downhole tools) penetrates the well barrier and cannot be sheared, the following requirements shall be in place;

a) all non-shearables in the workstring shall be identified;

b) when running non-shearables, a procedure for maintaining well control shall be in place.

The anticipated duration the well barrier elements will be exposed to non-shearable tools shall be identified and included in the hazard and operability studies/hazard identification (HAZID/HAZOP) exercise identifying the risk exposure (typically; elapsed time, stuck tooling, well control situation, loss of vessel position) and any compensating measures considered necessary to meet the risk mitigation criteria.

6.2.1.5 Barrier Schematics for Well Intervention

During a well intervention operation, the number of available well barrier elements and the physical extent of well barrier envelopes may change as the well intervention operation progresses. A well barrier schematic (WBS) should be prepared for each well activity and included in the procedure.

Well barrier schematics should be developed as a practical method to demonstrate the presence of defined primary and secondary well barriers in the well. Operational procedures (i.e., operational barriers) shall be included to address any activity where it is not possible to have a secondary barrier available.

Practical methods to demonstrate the presence of defined well barriers are tables, schematics, and descriptions. The tables and schematics should be tailored and aligned with the objectives of each stage of the planned intervention. Multiple tables and schematics may be needed to address all the situations during planned activities, but should not be limited to the content specific to each operation.

In the barrier philosophy, the barrier elements should be defined together with acceptance criteria and methods of monitoring status throughout the operations.

For guidance on developing barrier philosophies refer to NORSOK D-010, API 17A and API 96.

6.2.2 External Inspection and In-Service Maintenance

Systems shall be operated and maintained in a manner that ensures that the equipment functions as designed. An external visual inspection of open-water riser systems should be conducted by remote operated vehicle (ROV) while deployed subsea at least once every three days if weather and sea conditions permit. Alternatively, a video camera can be positioned on the WCP and used to inspect the subsea equipment, if desired.

Dynamic seals, such as high-pressure fluid swivels, telescoping joints, or seals associated with rotating equipment, should undergo regular visual inspections for signs of leaks. Results and actions shall be documented.

6.2.3 Documentation

The following documentation should be available upon request according to Section 9:

a) documented maintenance/repair and operational history (condition summary) of the relevant barrier elements;

b) verification and validation reports of well control equipment;

c) design revision history.

6.3 Operational Risk Assessment

A documented risk assessment shall be performed by the end user or third-party system integrator (Section 4.7) prior to commencement of well intervention operations. The risk assessment shall, as a minimum, address the following:

a) Barrier philosophy & identification

b) Ability to kill the well

c) Detailed operational procedures

d) Equipment availability, condition, and/or limitations

e) Metocean conditions and limitations

f) Condition of in-situ well equipment and hardware

g) Emergency operations e.g., drift-off, drive-off

h) Crew training and competency

i) Crew accountability and communications

j) Normal, extreme, and survival loading events

Operations shall be limited to activities identified in the risk assessment. Significant changes in the items above shall require a review of the risk assessment.

6.4 Crew Drills

Prior to commencement of well intervention operations, the end user shall have a documented process for the planning and execution of crew drills. Crew drill planning and execution should, as a minimum, include the following:

a) Ability to execute emergency and not-routine safety procedures required for the upcoming operation

b) Responsibilities and accountabilities

c) Communication protocols

d) Awareness of key safety issues

During operations, personnel shall be prepared to secure the well in a manner as per the barrier philosophy and end-user documented well control procedures.

6.5 Field Repair

Field repair is defined as any activity involving disassembly, reassembly, or replacement of components or assemblies in the well intervention system which are performed after the completion of the SIT and prior to or during well intervention operations.

NOTE Repair does not include machining, welding, heat treating, or other manufacturing operations.

The OEM should be consulted regarding replacement parts and assemblies.

If replacement parts and assemblies are acquired from a non-OEM, the assemblies shall be equivalent or superior to the original equipment and fully tested, design verified, and supported by a MOC and traceable documentation in accordance with relevant specifications.

Field repairs which change any of the following shall undergo a documented risk assessment (Sec 4.7 & 6.3):

a) rated capacity

b) operating envelopes

c) interface changes (that influence form, fit, and function of the well intervention system)

d) safety strategy

e) equipment performance parameters (that influence form, fit, and function of the well intervention system)

Designated barriers or barrier elements which undergo field repair shall be re-tested in accordance with Sec 8.5.

All field repairs shall be documented by the end user or third-party system integrator per section 9.

6.6 System Condition Summary

A condition summary record shall be maintained by the equipment owner which reflect physical changes to equipment such as; wear, corrosion, or reduction of fatigue life due to use and environmental factors.

The end user shall provide (vessel specific) actual intervention data, as input to the annual condition summary, to the equipment owner in order to determine residual fatigue life, and for maintenance planning.

Typical intervention data examples used to determine consumed fatigue life and maintenance intervals is as follows as applicable:

a) Riser tension;

b) Critical component cycle count;

c) running sequence of joints;

d) flex Joint angles, amplitude and frequency;

e) fluid media (internal / external);

f) pressure/temperature (including cycles);

g) water depth;

h) equipment failure reports/analysis;

i) job test log

j) trip log

k) system configuration;

l) recorded metocean data

m) vessel information for GRA analysis

n) actual load cases;

- extreme or survival;
- exceedance of operability.

The equipment owner will be responsible for preparation and issuance of condition reports. Previous condition reports, and post operations global riser analysis results, shall be kept for the life of the equipment.

The equipment owner shall be responsible for the determination if individual components or the entire system should be inspected, repaired, replaced, or retired from service.

7. Quality, Maintenance, Preservation, Storage, and Shipping

7.1 General

The purpose of this section is to define quality requirements for maintenance, preservation, storage, and handling over the design life of the system post-manufacture.

The scope of this section includes equipment and replacement components. It specifies requirements for maintenance frequency, preservation, manuals, logistics, storage conditions, and handling of the equipment and assemblies. It also includes in-service inspection; processes, intervals, and tasks, monitoring for fatigue, corrosion/erosion, and mechanical damage over the life of the asset.

7.2 Quality

7.2.1 Quality Management

The system integrator shall follow a Quality Management System (QMS) as outlined within API Q2 or other internationally recognized Quality Management standards, to ensure the performance and operation of the equipment or service is consistent through the design life of the system in service.

The System integrators shall demonstrate a process and risk-based approach in the development of systems as set out within their QMS. In following a recognized QMS and the guidelines below, then the system integrator will deliver, service quality along with risk mitigation all supported by validation and actual service performance data.

Implementing a robust Quality program ensures:

a) Identification of what is and what is not critical within the system design and service.

b) Reduced risk potential through analysis.

c) Increased control and barrier implementation to reduce any impact on operations.

d) Data acquisition and digitization

e) Development of system design and evolution through continual learning.

7.2.2 Quality Planning

Quality planning shall enable the system integrator to identify the factors, which can be defined as important to the delivery of service, and effectively detail and risk mitigate how the objectives can be achieved. The element of quality planning shall be detailed and documented through the duration of the system lifecycle and as a minimum should contain the following elements:

a) Service Quality Plan, based upon API Q2-2011 Clause 5.7.2 or other internationally recognized Quality Management standards,

b) Service Design, based upon API Q2-2011 Clause 5.4 or other internationally recognized Quality Management standards.

c) System Risk Analysis (FMECA, HAZOP, HAZOD, Reliability assessment), based upon API Q2-2011 Clause 5.3 or other internationally recognized Quality Management standards,

d) System Design review plan (GRA, Connection Analysis, Life Cycle).

e) Identification of safety-critical elements.

f) Contingency Planning, based upon API Q2-2011 Clause 5.5 or other internationally recognized Quality Management standards,

g) Identification and Traceability, based upon API Q2-2011 Clause 5.7.3 or other internationally recognized Quality Management standards,

h) Personnel Competency based upon API Q2-2011 Clause 4.3 or other internationally recognized Quality Management standards.

7.2.3 Quality Control

Quality control procedures shall be in place to verify and ensure that the equipment and/or service provided adheres to the defined requirements.

At a minimum the following quality control procedures shall be followed:

a) Material selection and validation in line with API 17G, and Local Regulatory Requirements to demonstrate materials selected are fit the proposed service,

b) Test procedures inclusive of Testing, Measuring, Monitoring and Detection Equipment procedures (TMMDE) based upon ISO 9001:2015 Clause 7.1.5 or other internationally recognized Quality Management standards,

c) Preventative Maintenance, Inspection, and Test program (PMIT) based upon API Q2-2011 Clause 5.7.8 or other internationally recognized Quality Management standards,

d) Inspection and Test Plan (ITP), to demonstrate quality control of manufacturing and associated procedures.

e) System Design Review(s), based upon API Q2-2011 Clause 5.1.3 or other internationally recognized Quality Management standards,

f) Verification and validation procedures shall be based upon the system design basis and in line with API Q2 or other international recognized quality management standards.

7.2.4 Quality Assurance

Quality Assurance shall be in place to confirm all aspects of in-service equipment delivery is being monitored, maintained, and evaluated through the lifecycle of the system design.

Embedded within the Quality Assurance scope as a minimum the following elements should be captured:

a) Service performance validation based upon API Q2-2011 Clause 5.9 or other internationally recognized Quality Management standards,

b) Equipment status records, based upon API Q2-2011 Clause 5.7.4 or other internationally recognized Quality Management standards,

c) Customer notification based upon API Q2-2011 Clause 5.10.4 or other internationally recognized Quality Management standards,

d) Collection and analysis of operational data based upon API Q2-2011 Clause 6.3 or other internationally recognized Quality Management standards,

e) Execution of service, based upon API Q2-2011 Clause 5.7 or other internationally recognized Quality Management standards.

7.2.5 Quality Improvement

A continuous Quality Improvement (QI) process shall be in place to enable the evolution of an in-service system to deliver and improve on elements such as Delivery timeline, manufacturing and materials selections, efficiencies and effectiveness of the system, overall safety and reliability. The QI process also applies to associated practices in design, manufacturing and operational philosophies.

The QI process should be set up to collect positive data as well as data relating to failures within the system. Lessons learned should be identified to further enhance and develop processes and procedures for the delivery of equipment and systems.

QI elements to address that focus on continual improvement shall include, but not be limited to the following:

a) Non-Conformities, based upon API Q2-2011 Clause 5.10 or other internationally recognized Quality Management standards

b) Audits, based upon API Q2-2011 Clause 6.2 or other internationally recognized Quality Management standards.

c) Improvement of service, based upon API Q2-2011 Clause 6.4.1 or other internationally recognized Quality Management standards.

d) Preventive and corrective action findings, based upon API Q2-2011 Clause's 6.4.2 & 6.4.3 or other internationally recognized Quality Management standards.

e) Management of Change (MOC), based upon API Q2-2011 Clause 5.11 or other internationally recognized Quality Management standards.

7.3 Maintenance

Systems shall be operated, inspected, and maintained to minimize failure and to ensure an acceptable performance level throughout the design life.

The objective of maintenance is to predict and address issues before failure and may include inspection, replacement of expendable components, repair, remanufacture, and testing. Repair and remanufacture may include machining, welding, heat treatment, or other manufacturing operations.

It is the responsibility of the Original Equipment Manufacturer to define the maintenance strategy (preventive, predictive, corrective, etc.), identify critical components, and provide details of the maintenance activities. The Manufacturer should specify any activities or procedures that are to be performed solely by the manufacturer's representative.

Thereafter, it is the Equipment Owner and End-User's responsibility to work with Equipment Manufacturer to implement the Inspection, Maintenance, Repair, and Remanufacture procedures in consideration of maintenance strategy, equipment application, loading, work environment, usage, and other operational conditions. It is also the responsibility of the Equipment Owner and End-User to implement a schedule for when inspection and maintenance activities need to occur, based on input from the Equipment Manufacturer. A maintenance schedule should take into account, but not be limited to, the following factors;

a) Regulatory requirements

b) Risk assessment (including FMECA)

c) Equipment reliability data

d) Specific time intervals or usage-based intervals based on manufacturer's recommendation

e) Present condition and service history of equipment based on monitoring data and operational history log

f) Present storage and/or operating conditions of the system

g) Technology readiness level of equipment

The Equipment Owner, in cooperation with the End-User, shall ensure the maintenance program for the equipment is available, executed, and documented.

Replacement parts shall be in conformance with the relevant API standards and satisfy the design/operating requirements. Remanufacturing should follow the appropriate API specification and manufacturers requirements.

7.4 Inspection

7.4.1 Inspection activities:

The inspection includes the following categories; the basis of activities and schedule shall be per table 5:

a) Observation of equipment during operation for indications of inadequate performance

b) Visual Inspection for corrosion, deformation, loose, or missing components, deterioration, proper lubrication, and visible external damage e.g., cracks.

c) Non-Destructive Examination (including dimensional control) of exposed critical area and may involve some disassembly to access specific components, and identify any wear that exceeds the manufacturer's allowable tolerances

d) Non-Destructive Examination (including dimensional control) of all critical components (e.g., primary load carrying, pressure containing, or controlling) as defined by the manufacturer. This may involve extensive disassembly to gain access to all components involved.

Table 5—Basis for Inspection and Verification Planning

Inspection For	Activities, Intervals, and Acceptance Criteria
Fatigue	System Integrator / Manufacturers recommendations
Mechanical damage	System Integrator / Manufacturers recommendations
Corrosion of equipment [a]	System Integrator / Manufacturers recommendations, API 17G or equivalent
Erosion of equipment [a]	System Integrator / Manufacturers recommendations, API 17G or equivalent
Functionality verification	System Integrator / Manufacturers recommendations, API 17G or equivalent
System and equipment integrity verification	System Integrator / Manufacturers recommendations, API 17G, API 6A or equivalent
Following survival loading	System Integrator / Manufacturers recommendations, API 17G or equivalent
IWOCS inspection	System Integrator / Manufacturers recommendations, API 17G5
[a] Note that in API 17G corrosion allowance accounts for corrosion and erosion	

All NDE personnel performing the inspection shall be qualified to an accredited certification e.g., Internal (ASNT) External (ACCP, ISO 9712) or equivalent.

7.4.2 Acceptance criteria:

Acceptance criteria shall be established based on experience, manufacturer's recommendations, and governing Codes and Regulations. Rejected equipment should not be accepted for operation at a reduced capacity unless a documented assessment has been carried out following the original design criteria and design codes.

7.4.3 Maintenance

7.4.3.1 Maintenance activities

Maintenance may include any but not limited to the following: inspection, adjustment, cleaning, lubrication, expendable component replacement, coating touch-up/repair, and testing.

7.4.3.2 Schedule

The maintenance schedule and strategy may be based on, but not limited to, specific time intervals, measurable wear limits, system condition status, function cycle accumulation, non-performance of equipment, environment, reliability data, regulatory requirements, and any monitoring data.

7.4.4 Repair and Remanufacture

7.4.4.1 Inspection and Maintenance of Well Intervention Systems

Inspection and maintenance of the system is composed of individual intervention equipment. Intervention equipment shall be inspected and maintained per manufacturer requirements. Actions performed on equipment that involves the replacement of parts (other than expendables), and actions that involve a special process or machining. These activities are the results of the inspection and should follow the manufacturer's recommendations.

7.4.4.2 Acceptance criteria

Processes, methods and inspection procedures, test procedure, and acceptance criteria following repair and remanufacture are to follow the manufacturer's original specifications and quality requirements. Any deviation is to be recorded accordingly. Replacement parts should meet or exceed the original equipment manufacturer's criteria.

7.4.5 Documentation and traceability

The equipment Owner is responsible to ensure the records of maintenance work performed on the system, parts, and assemblies are maintained on file and are readily available. The records should as a minimum include the following:

a) Original manufacturing records from the manufacturer

b) Inspection records (following manufacturer's requirements, Inspection activities per categories 1 and 2 in section 6 may not need to be documented)

c) Maintenance records

d) Repair and Remanufacture records

e) Inspection and testing records per manufacturer requirements following maintenance, repair or remanufacture

f) Certificate of Compliance associated with any manufacturer requirements for post-manufactured COC processes

g) Manufacturer's product alerts, equipment bulletins or similar, issued during the lifespan of the equipment

If any critical component has been repaired, remanufactured, or replaced during the maintenance process, the traceability of the component is to be maintained following the manufacturer's original quality requirements and the testing that follows documented accordingly.

7.4.6 Recertification of well intervention equipment

All well intervention equipment shall undergo a recertification process to ensure its integrity and functionality, and to verify and document that the equipment meets the acceptance criteria provided by the recognized standards.

The major inspection process is to be determined by the manufacturer, equipment owner or system integrator.

Inspection/maintenance activities shall be a part of an established maintenance plan for the equipment and shall be executed at least every five (5) years calendar time unless data from condition-based maintenance or reliability centered maintenance strategies establish a different frequency.

For five (5) yearly scheme, which is based on preventive (scheduled) maintenance strategy, major inspection activities shall be executed if the equipment has reached five (5) years since:

a) the date the equipment owner/system integrator accepts delivery on the equipment system for a new system

b) the date the inspected equipment is placed into service, when preservation and storage records are available for equipment that has been stored in accordance with 7.5.2

c) the date of the last major inspection for the component, if preservation and storage records in accordance with 7.5.2 are not available.

Major inspection procedure(s) shall be established by the manufacturer or system integrator and shall provide as a minimum:

i. list of the critical component(s)

ii. list of spare parts

iii. scope for inspection activities

iv. acceptance criteria for inspection activities

v. repair activities (if any)

vi. test activities

vii. acceptance criteria for test activities

Assessment, based on the major inspection process shall also be used to determine the condition of the equipment if one or more of the following conditions exists:

— extension of design life (including fatigue) beyond the original design life is planned;

— equipment stored in conditions that were outside the manufacturer's specification.

— equipment not maintained following the manufacturer's specifications.

— exposure to extreme or survival load during operation.

NOTE 1 As part of or adjacent to the recertification, the equipment shall be repaired, inspected, and tested to validate the performance level is equal to the original working condition.

NOTE 2 5-year life scheme is based upon 5 calendar years from the time agreed section 7.4.6

7.4.7 Monitoring and data collection of operational parameters.

Monitoring of the operational parameters for the subsea well intervention system shall be performed to prevent exceedance of the component capacities, to record any extreme or survival load cases, and to provide input for maintenance strategies that are based on monitoring data.

The service provider or system integrator shall be responsible for the fatigue damage analysis and the recording of the accumulation of fatigue damage.

The service provider and the system integrator shall provide data to support the equipment owner in managing the fatigue damage record of the equipment. (Clause 9 Documentation)

Recording of fatigue loads, operational parameters, and environmental conditions shall be conducted to accumulate fatigue damage to predict remaining fatigue life. The end-user shall be responsible for providing the actual fatigue loads, actual operational parameters, and actual environmental conditions the system has been exposed to during operation. See Section 9.

Condition of the subsea well intervention system also shall be monitored by performing routine inspections per 6.6 to ensure that component design conditions are not exceeded. This is the combined responsibility of the service provider/system integrator/equipment owner.

Fatigue damage and fatigue damage accumulation shall be analyzed following API 17G Annex D.

A detailed log of the fatigue damage and remaining fatigue life shall be maintained by the equipment owner of the subsea equipment. This information combined with fatigue or fracture mechanics analysis shall be used to determine the need for system components inspections per equipment owners written procedures.

7.5 Preservation, Storage, and Shipping

7.5.1 General

All systems shall have a documented procedure with identified time intervals for the preservation and inspection to prevent product damage or deterioration caused by environmental conditions, as required in API Q1/Q2.

7.5.2 Preservation and Storage

The System integrator/owner shall provide procedure and requirements should be based off of manufacturer recommendations.

Preservation and storage include; instructions for the storage environment, age control procedures, cleanliness, general debris protection and UV exposure/protection requirements. Instructions shall address at minimum environmental prevention, material protection, electrical systems, and software where applicable.

7.5.3 Shipping

Shipping shall be executed following the System integrator/owner's recommendations and requirements. It should be subject to regional regulations.

8. System Readiness

8.1 Purpose

The purpose of the System Readiness section is to define the system level testing scope, frequency, and acceptance criteria in order to demonstrate conformance to the original design specifications. Additional testing may be required by the end-user based on job and well-specific requirements.

The scope of System Readiness includes a breakdown of the following types of testing:

- System Integration Test (SIT);
- Stump / Deck Test prior to deployment;
- Subsea Testing following initial latch-up;
- Periodic Testing;
- Subsea Testing following subsea well-hop.

8.2 General

A defined testing program shall be implemented or overseen by the system integrator. The completed test documentation shall be available for end user and regulatory review.

In addition to the API RP17G1 testing requirements, testing shall be performed to ensure that the design is capable of meeting the requirements for the specified application or intended use.

All testing invalidated by refurbishment or redress shall be re-performed as outlined in Tables 6-9.

All testing invalidated by remanufacture or modification shall be re-performed as outlined in Tables 6-10.

Equipment and components not covered by API 17G shall be reviewed against a program specified by the manufacturer and agreed upon by the end user.

For subsea intervention equipment that utilizes drilling BOP equipment such as Rams or Annulars, the drilling BOP equipment shall meet the testing requirements as dictated by Section 4. When using a Drilling BOP and an In-Riser Intervention System, the BOP shall meet the requirements as dictated by API Standard 53 while the intervention system shall meet the requirements as dictated by API RP17G1.

8.2.1 Inspection Tests

Inspection test practices and procedure details may vary and are outside the scope of this document.

Inspections of all well control equipment shall be performed in accordance with the equipment owner's maintenance system.

NOTE Inspection tests may include but are not limited to: visual, dimensional, audible, hardness, functional, pressure, and electrical tests.

8.2.2 Function Tests

Pressure tests shall qualify as function tests.

A function test shall be performed following the disconnection or repair and limited to the affected component.

Remote panels where all functions are not included (e.g., emergency disconnect panels) shall be function tested in accordance with the equipment owner's procedures.

Actuation times (and volumes, if applicable) shall be recorded for evaluating trends.

Function tests shall be performed as outlined in Sections 8.3-8.7.

8.2.3 Pressure Measurement Devices

8.2.3.1 Test Pressure Measurement Devices

Test results shall be recorded using test pressure gauges and chart recorders or data acquisition systems that are calibrated annually to a recognized standard according to the equipment manufacturer's procedures and requirements.

Analog test pressure measurements shall be made at not less than 25% and not more than 75% of the full pressure span.

Electronic pressure gauges, chart recorders, and data acquisition systems shall be used within the manufacturer's specified range.

8.2.3.2 Operational Pressure Measurement Devices

Analog and electronic pressure measurement devices shall be used within the manufacturer's specified range.

It is acceptable for gauges to be used during normal operations to read full scale, but these shall not serve as test gauges.

Operational pressure measurement devices shall be calibrated to a recognized standard at least every three years.

8.2.4 Pressure Test General Requirements

All components that can be exposed to well pressure shall be tested first to a low pressure and then to a high pressure as outlined in Section 8.2.5.

Valves that are intended to seal against flow from both directions shall be pressure tested from both directions.

8.2.5 Pressure Test Acceptance Criteria

The pressure test shall be conducted such that leaks can be identified. Colored or fluorescent dyes may be added to the test fluid to enhance detection of leaks. Acceptance criteria includes no visible leakage. Pressure shall remain stable during evaluation period.

For low pressure tests:

a) Test to 250 psi to 350 psi (1.72 MPa to 2.41 MPa) for 5 minutes;

b) Any initial pressure greater than 350 psig shall be bled back to a pressure between 250 and 350 psi before starting the test;

c) If the initial pressure exceeds 500 psi, it shall be bled back to zero and the test reinitiated;

d) 10 psi deviation is accepted to account for temperature effect, air entrapment, and media compressibility.

For high pressure tests:

i. Test to high pressure requirement for 5 minutes;

   — For operational tests, high pressure requirement shall be at least Max Differential Pressure + WKM;

   — For all other tests, high pressure requirement shall be the RWP of the equipment.

ii. Any initial pressure greater than 5% above the specified test pressure shall be bled back to zero and the test reinitiated starting with the low-pressure test;

iii. 3% per hour deviation is accepted to account for temperature effect, air entrapment, and media compressibility.

8.2.6 Drawdown Test

When required as outlined in Sections 8.3-8.7, the Drawdown Test shall be performed as follows:

a) Isolate the pumps from the accumulation system and isolate topside accumulation;

b) Perform ESD and verify that all devices required to secure the well have closed;

c) Deisolate the pump system including topside accumulation and record the time it takes to charge the system from the final pressure following Drawdown Testing to the operating pressure of the system. Recorded times should be trended across projects to identify issues.

8.2.7 Response Times

Measurement of response time shall begin when the function is activated at any control panel and shall end when the device has finished movement. Verification of complete function shall be in the form of visual inspection, flowmeter volume count, or pressure testing.

The following response times shall be met by at least one of the surface/subsea power supplies:

a) Close each sealing device including any associated locks in 45 seconds or less;

b) Close each shearing device including any associated locks in 45 seconds or less;

c) Unlatch of EDP in 45 seconds or less;

d) For emergency functions (Deadman, Autoshear, PSD, ESD, and EQD), secure the well in 90 seconds or less.

   — Securing the well includes closing barriers and does not include disconnects or other functions that may subsequently be employed after the well has been secured.

— Project specific requirements may dictate using a time less than 90 seconds to secure the well. In those instances, the value located on the WSOC shall be the acceptance criteria.

8.2.8 Test Fluids

Hydrostatic pressure tests should be conducted with water or water with preservation, anti-freeze, or colorant additives.

Control system fluid should adhere to the system OEM requirements.

NOTE During operations, the fluid in use is acceptable to perform subsequent tests of the intervention system.

8.3 System Integration Testing

8.3.1 Purpose

The purpose of the System Integration Test (SIT) is to verify the system's design related to operational objectives, functionality, capacities, interfaces, and sealing integrity not already proven by FAT or other testing to the extent that it is practical. The SIT should also verify that the system meets the end user's specifications to the same system operational objectives, functionality, capacities and features. SIT, as it is defined in this section, may also apply to sub-system tests performed including end user specific interface testing.

The SIT typically provides the verification of functional performance not possible with single equipment unit verification testing and shall be performed on new subsea intervention system designs as well as to verify any design changes to existing equipment. New equipment built to existing designs that have been previously verified should undergo SIT prior to use in the field.

A reduced version of the SIT may be performed to verify changes to the design over the life of the equipment.

All vessel specific interface points shall be verified upon initial integration to the vessel.

8.3.2 Requirements

All functionality shall be verified from each of the control stations. System level redundancies as defined by the OEM and the integrator, shall be confirmed during SIT.

NOTE A requirement is that, if the OEM defines something explicitly as a redundancy (such as in their cause and effects or FMECA) then it has to be proven. It is up to the OEM to decide the best way to prove these and may not require full system level testing.

Table 6—System Integration Testing Requirements

System/Component	Test Description	Test Acceptance Criteria
Interface of Equipment		
Intervention System	Stack-up.	All system interfaces confirmed that will be made-up during operations. [f]
IWOCS	Hook-up and Function.	All control system interfaces confirmed that will be made-up during operations. [f]
System Level Redundancies		
Redundant Systems[h]	Verify redundant systems using regressed state testing[j].	System functionality shall adhere to Safety Strategy.

Secondary Control Systems		
Acoustic System	Activation test of all functions through acoustic control unit.	Verification of complete function shall be in the form of visual inspection, flowmeter volume count, or pressure testing. Response times to meet Section 8.2.7.
ROV Intervention	Function test of all ROV Operable Functions.	Verification of complete function shall be in the form of visual inspection, flowmeter volume count, or pressure testing. Response times to meet Section 8.2.7.[g]
Emergency Control Systems		
Deadman Circuit Test[a]	All modes function tested by removing electric power/signal transmission and hydraulic supply to the LWRP.	Verification of complete function shall be in the form of visual inspection, flowmeter volume count, or pressure testing. Response times to meet Section 8.2.7.[C]
Autoshear Circuit Test[abd]	All modes function tested by activation of trigger.	Verification of complete function shall be in the form of visual inspection, flowmeter volume count, or pressure testing. Response times to meet Section 8.2.7.[C]
Emergency Functions	PSD, ESD, and EQD from all Stations. PSD, ESD, and EQD in all operating modes from at least one Station.	Verification of complete function shall be in the form of visual inspection, flowmeter volume count, or pressure testing. Response times to meet Section 8.2.7.[C]

Primary Control Systems		
Control stations[e]	Function test of all control stations and remote panels.	Positive verification of intended operation.
Control Modules	All available functions tested from each installed control module. Verify all readings from all sensors and health monitoring devices on each installed control module.	Verification of complete function shall be in the form of visual inspection, flowmeter volume count, or pressure testing. Actuation times (and volumes, if applicable) shall be recorded for evaluating trends. All sensor data to be within equipment owner's criteria.
Spring Return Valves	Valve to be function tested with springs only (no hydraulic assist).	Verification valve fully shifts by visual inspection, pressure testing, flowing through valves, or other applicable means.
Hydraulic Control Circuits	The integrity of the hydraulic circuits to be verified at the system design pressure. Test duration to be per equipment owner requirements.	Visual verification of no leaks.
Intervention System Barrier Components	Pressure Tests to verify the integrity of the pressure containing and pressure controlling barriers of the Intervention System.	Complies with the acceptance criteria outlined in Sections 8.2.4 and 8.2.5.
Intervention System	System to be drifted with the applicable drift as determined by original equipment manufacturer's design.	Pass completely through stack after completion of testing.

[a] Securing the well includes closing barriers and does not include disconnects or other functions that may subsequently be employed after the well has been secured.
[b] Autoshear systems that are initiated by removal of electric power and hydraulic supply to the stack do not require a separate test from the deadman system.
[c] Minimal time requirement to secure the wellbore does not include functions after well has been secured.
[d] Power fluid may be supplied from surface accumulators or an alternative source.
[e] Maintenance panels included.
[f] For components that are project specific, perform interface testing using only one configuration.
[g] Testing is only being performed to verify system capability of meeting response times. It is not required to mimic exact ROV functionality since this may vary between projects.
[h] Systems or sub-systems that provide a complete back-up to another system or sub-system of the IWOCS.
[J] Testing that is required to demonstrate physical performance of any redundant function or system(s).

8.4 Stump Testing

8.4.1 Purpose

The purpose of the Stump Testing is to verify the system's design readiness related to operational objectives, functionality, capacities, interfaces, and sealing integrity prior to subsea deployment.

8.4.2 Requirements

Table 7—Stump Testing Requirements

System/Component	Test Description	Test Acceptance Criteria
Secondary Control Systems		
Acoustic System	Activation test of all functions through acoustic control unit.	Verification of complete function shall be in the form of visual inspection, flowmeter volume count, or pressure testing. Response times to meet Section 8.2.7
ROV Intervention	Function test of the ROV Operable Functions required to secure the well and disconnect.	Verification of complete function shall be in the form of visual inspection, flowmeter volume count, or pressure testing. Record response times.
Emergency Control Systems		
Deadman Circuit Test[a]	Function tested by removing electric power/signal transmission and hydraulic supply to the LWRP.	Verification of complete function shall be in the form of visual inspection, flowmeter volume count, or pressure testing. Response times to meet Section 8.2.7.[c]
Autoshear Circuit Test[abd]	All modes function tested by activation of trigger.	Verification of complete function shall be in the form of visual inspection, flowmeter volume count, or pressure testing. Response times to meet Section 8.2.7.[c]
Emergency Functions	Verify emergency control functionality as follows: • PSD from one station; • ESD from one station; • EQD from at least one station; • Dry fire EQD from all remaining stations.	Verification of complete function shall be in the form of visual inspection, flowmeter volume count, control system feedback readings, or pressure testing. Response times to meet Section 8.2.7.[c]
UPS Battery Test	One-hour UPS system function test shall be performed to demonstrate that the safety class control functions can be monitored and operated.	Verification of the UPS battery system shall be by operation of a single Intervention System function after one hour. Monitor system accumulation for duration of test to ensure pressure remains above minimum required operating pressure.

Primary Control Systems		
Control stations[e]	Function test of all control stations and remote panels.	Positive verification of intended operation.
Control Modules	All available functions tested from each installed control module. Verify all readings from all sensors and health monitoring devices on each installed control module.	Verification of complete function shall be in the form of visual inspection, flowmeter volume count, control system feedback readings, or pressure testing. Actuation times (and volumes, if applicable) shall be recorded for evaluating trends.
Spring Return Valves	Valve closure to be function tested with springs only (no hydraulic assist).	Verification valve fully shifts by visual inspection, pressure testing, flowing through valves, or other applicable means.
Hydraulic Control Circuits	The integrity of the hydraulic circuits to be verified at the system design pressure. Test duration to be per equipment owner requirements.	Visual verification of no leaks. Test acceptance criteria per OEM.
Intervention System Barrier Components	Hydrostatic Pressure Tests to verify the integrity of the pressure containing and pressure controlling barriers of the Intervention System.	Complies with the acceptance criteria outlined in Sections 8.2.4 and 8.2.5.
Intervention System	System to be drifted with the applicable drift as determined by the project.	Pass completely through stack after completion of testing.

[a] Securing the well includes closing barriers and does not include disconnects or other functions that may subsequently be employed after the well has been secured.

[b] Autoshear systems that are initiated by removal of electric power and hydraulic supply to the stack do not require a separate test from the deadman system.

[c] Minimal time requirement to secure the wellbore does not include functions after well has been secured.

[d] For testing purposes only, power fluid may be supplied from surface accumulators or an alternative source

[e] Maintenance panels excluded.

8.5 Initial Subsea Latch-up Testing

8.5.1 Purpose

The purpose of the Initial Subsea Latch-up Testing is to verify the system has been correctly interfaced to the well, to confirm that no components were damaged since Stump Testing, and to verify functionality with changes to the environment.

8.5.2 Requirements

Table 8—Initial Subsea Latch-up Testing Requirements

System/Component	Test Description	Test Acceptance Criteria
Secondary Control Systems		
Acoustic System	Function test of one main bore sealing device through acoustic control unit. Perform battery check.	Verification of complete function shall be in the form of visual inspection, flowmeter volume count, or pressure testing. Response times to meet Section 8.2.7.
ROV Intervention	Function test of one main bore sealing device.	Verification of complete function shall be in the form of visual inspection, flowmeter volume count, or pressure testing. Response times to meet Section 8.2.7.
Emergency Control Systems		
Deadman Circuit Test[a]	Function tested by removing control and hydraulic supply to the activation device.	Verification of complete function shall be in the form of visual inspection, flowmeter volume count, or pressure testing. Response times to meet Section 8.2.7.[b] Final accumulator pressure greater than the MOP to secure the well.
Emergency Functions	Perform ESD from an emergency panel.	Verification of complete function shall be in the form of visual inspection, flowmeter volume count, or pressure testing. Response times to meet Section 8.2.7.[b] Final accumulator pressure greater than the MOP to secure the well.
Primary Control Systems		
Control stations[c]	Communication test of the active control stations.	Positive verification of intended operation.
Control Modules	Function test of all available subsea barriers from each installed control module.	Verification of complete function shall be in the form of visual inspection, flowmeter volume count, or pressure testing. Response times to meet Section 8.2.7.

Accumulator System HPU pumps	Drawdown test per Section 8.2.6.	Verification shall be that the final accumulator pressure is greater than the MOP specified in system accumulator sizing. Recharge time to meet Section 8.2.6.
Intervention System Barrier Components	Hydrostatic Pressure Tests to verify the integrity of the pressure containing and pressure controlling barriers of the Intervention System.	Complies with the acceptance criteria outlined in Sections 8.2.4 and 8.2.5.
[a] Securing the well includes closing barriers and does not include disconnects or other functions that may subsequently be employed after the well has been secured. [b] Minimal time requirement to secure the wellbore does not include functions after well has been secured. [c] Maintenance panels excluded.		

8.6 Periodic Testing

8.6.1 Purpose

The purpose of Periodic Testing is to perform:

- Subsequent operational functional and pressure testing during an extended subsea deployment – captured in Table 9;
- Further testing of the equipment that is outside of the normal testing performed during operations – captured in Table 10. New systems shall undergo the testing in this table prior to first use.

8.6.2 Requirements

Table 9—Operational Periodic Testing Requirements

System/Component	Test Description	Test Acceptance Criteria	Frequency
Secondary Control Systems			
Acoustic System	Battery check	Verification of communication.	Not to exceed 21 days per deployment
Emergency Control Systems			
Accumulator System HPU pumps	Drawdown test per Section 8.2.6.	Verification that the final accumulator pressure is greater than the MOP specified in system accumulator sizing. Recharge time to meet Section 8.2.6	Not to exceed 180 days per deployment
Primary Control Systems			
Intervention System	Function test each barrier device from one control station. Alternate control stations between test intervals.	Verification of complete function shall be in the form of visual inspection, flowmeter volume count, or pressure testing. Response times to meet Section 8.2.7	Not to exceed 14 days per deployment
Intervention System Barrier Components	Pressure Tests to verify the integrity of the pressure containing and pressure controlling barriers of the Intervention System.	Complies with the acceptance criteria outlined in Sections 8.2.4 and 8.2.5.	Not to exceed 30 days per deployment

Table 10— Non-operational Periodic Testing Requirements

System/Component	Test Description	Test Acceptance Criteria	Frequency
Secondary Control Systems			
ROV Intervention	Subsea function test of all ROV Operable Functions.	Verification of complete function shall be in the form of visual inspection, flowmeter volume count, or pressure testing. Record response times.	Not to exceed 12 months
System Level Redundancies			
Redundant Systems	Verify redundant systems using regressed state testing.	System functionality shall adhere to Safety Strategy.	Not to exceed 5 years
Emergency Control Systems			
Autoshear Circuit Test[abd]	Tested subsea by activation of trigger	Verification of intended operation/sequence may be in the form of visual inspection, flowmeter volume count, pressure testing, or other applicable means. Response times to meet Section 8.2.7.[C]	Not to exceed 5 years
Emergency Functions	Perform EQD from one emergency panel. Test shall be performed subsea. Weight may be set down during testing to limit risk to equipment and personnel.	Verification of complete function shall be in the form of visual inspection, flowmeter volume count, or pressure testing. Response times to meet Section 8.2.7[c] Final accumulator pressure greater than the MOP to secure the well.	Not to exceed 5 years
Primary Control Systems			
Control fluid reservoir (if applicable)	Control fluid reservoir mixing operation and level alarms.	Verification that appropriates visual and/or audible alarm is received from each tank fluid level. Verification of automatic mixing system functionality.	Not to exceed 12 months
Hydraulic Chambers	The integrity of the hydraulic chambers to be verified at the system design pressure. Test performed in accordance with OEM requirements.	Complies with the OEM's acceptance criteria.	Not to exceed 12 months

HPU Pumps	HPU pump systems start and stop pressures	Verification that primary and secondary pump systems start and stop per the system design requirements.	Not to exceed 12 months
Intervention System Barrier Components	Hydrostatic and, if applicable, Gas Pressure Tests to verify the integrity of the pressure containing and pressure controlling barriers of the Intervention System.	Complies with the acceptance criteria outlined in API 17G.	Not to exceed 5 years.

[a] Securing the well includes closing barriers and does not include disconnects or other functions that may subsequently be employed after the well has been secured.

[b] Autoshear systems that are initiated by removal of electric power and hydraulic supply to the stack do not require a separate test from the deadman system.

[c] Minimal time requirement to secure the wellbore does not include functions after well has been secured.

[d] Power fluid may be supplied from surface accumulators or an alternative source.

8.7 Well-hop Testing

8.7.1 Purpose

The purpose of the Well-hop Testing is to verify the system has been correctly interfaced to the well and that no components were damaged since the unlatching from the previous well. This testing affords the ability to be able to move between wells without recovering the system to surface, thereby saving time and additional testing on the equipment.

8.7.2 Requirements

Upon latching to the subsequent well, the following shall be performed:

- All disconnected pressure-containing system connections shall be pressure tested to the maximum pressures expected for well operations in accordance with Latch-Up Testing as defined in Table 8;
- All disconnected control system connections shall be function-tested at the maximum pressures expected for well control operations in accordance with Table 8;
- All barrier devices shall be function tested in accordance with Table 8;
- If the water depth between tested wells is greater than 250ft, Drawdown Testing shall be performed for the second well in accordance with Table 8.

9. Records Requirement

9.1 General

The purpose of Records Requirement is to ensure the minimum level of documentation necessary, and readily available for use as required.

All changes to the system that effect documentation (records) shall be noted and recorded by system owner (or assignee).

9.2 Operational Documentation Package

The following list comprises the documents required to be offshore with the equipment during operations;

a) System Installation Manual
b) System Operating Manual
c) Safety Strategy
d) Software Revision History
e) Offshore Maintenance Manual
f) System Readiness Documentation
g) Well Specific Operation Procedures
h) Safety Requirements Specification (SIL rated systems only)

9.3 Support Documentation Package

The following list comprises documents required to be readily available to support equipment. These documents should be readily available but may not mobilize offshore with the equipment.

a) System Design Basis
b) System Analysis Basis
c) Manufacturer Documentation Packages
d) Global Riser Analysis Report
e) Risk Analysis Reports
f) FMECA(s)
g) System Condition Summary
h) Inspection Records
i) Maintenance Records
j) Repair Records
k) Remanufacture Records
l) Certificate of Compliance
m) Inspection and Testing Records (including following maintenance, repair or remanufacture)
n) Manufacturer's Product Alerts, Equipment Bulletins

Annex A
(informative)
Safety Instrumented System (SIS) Requirements

A.1 General

Safety instrumented systems design philosophy shall be utilized in accordance with the reliability principles for minimizing the probability of failure on demand as defined in IEC 61511. Electrical and electronic hardware and software of safety function control hardware should meet the requirements set forth in IEC 61508. Hydraulic, pneumatic, software and mechanical components of safety function control hardware should be designed and implemented in accordance with the principles of IEC 61511. IEC 61508 applies only for such components with electrical/electronic/programmable electronic parts. The safety function reliability calculations shall demonstrate a probability of failure on demand value commensurate with the safety integrity level or any other equivalent method for each safety function.

To declare a particular probability of failure on demand, electrical and electronic safety instrumented system hardware shall define their periodic test interval, method of initiation (self-diagnostic software or operator initiated), and method of test (initiation of action, partial movement, or full function of final element) as one of its parameters. As a minimum, the test interval shall not be less than the periodic test intervals listed in the Safety Requirements Specification (SRS).

Safety instrumented system mechanical, hydraulic, and pneumatic hardware shall have a defined method of initiation (electronic or operator initiated), along with the method of test and test interval commensurate with the suggested periodic test intervals defined in the SRS.

The Safety Integrity Level (SIL) of the safety-instrumented function (SIF) along with the individual and combined reliability of the safety functions should demonstrate a calculated probability of failure on demand value commensurate with the defined SRS.

There shall be independence between the safety instrumented control hardware and normal controls hardware (and their respective functions) to the extent that the functional integrity of the safety function barrier/barrier element is not compromised. However, similar components with equivalent hardware fault tolerances may be used with both safety-instrumented and normal control system architectures to minimize part count and promote interchangeability.

For new designed components, conservative reliability data needs to be given based on complexity, experience with similar designs, and validation performances. Structured methods to determine these data shall be used. The validation performance needs to represent operational conditions. Further details on assessment of performance data are given in IEC 61508 and ISO 14224. If the volume or quality of data is not sufficient, a different validation approach should be considered.

NOTE ISO TR 12489 and NOG-070 provide specific reliability calculation guidance for instrumented and non-instrumented safety systems.

A.2 Safety Requirement Specification (SRS)

The primary objective of the SRS is to ensure that safety functions and other protection layers are effective for the identified risks and end user well specific conditions and operations.

The SRS shall define how safety functions and other protection layers are configured for the well-specific application.

The SRS shall specify the required monitoring systems to alert the operator of detectable safety function equipment failures.

The SRS may be developed and refined in phases in order to achieve its objectives.

The end user shall define the following general SRS requirements:

— Specification of safety functions and other protection layers.

— Safe state of each safety function (Note minimum requirements are specified in Table 1 and Table 2).

— Automatic safe state upon loss of control (Note minimum requirements are specified in Table 3).

— Desired response to specific failure modes (e.g., single failures, structural failures, functional failures).

— Method of safety function initiation (e.g., manual, automatic, autonomous, initiation by external systems).

— Specification of what valves/rams are safety class and shear class.

— Performance requirements (e.g., response times, reliability).

— Architectural requirements (e.g., independence, redundancy).

— Requirements towards interfaces between normal control system and safety functions.

— Frequency of testing of the safety functions during operations to ensure reliability and availability.

— Definition of operator response to abnormal conditions.

— Definition of operator response to extreme and survival conditions.

— Requirements for secondary/back-up functions to safety functions (e.g., acoustic EQD, ROV activation, landing string secondary functions activated by annular pressure).

The system integrator shall define the following detailed SRS requirements based on the general SRS requirements:

— Definition of safety system architecture.

— Safety function sequencing.

— Safety system configurations for operational scenarios (e.g., deployment, flowing, wireline, non-shearables in work string).

— Design requirements for example relating to:

  — shut down logic;

  — safety related software

  — safety system HMI (e.g., push buttons, indicator lamps, mode switches, etc);

  — energize or de-energize to trip for each safety function;

  — start up or restart of safety functions;

  — resetting each safety function after a shutdown (e.g., requirements for manual reset after shutdown);

  — overrides/inhibits/bypasses, including how they will be cleared; e.g., ability or restrictions for online maintenance;

  — cyber security, including of access for unintended or unauthorized changes.

— Requirements for monitoring of safety function equipment failure (e.g., accumulators, shut down panels).

— Mean time to repair, if relevant, while maintaining process/operations.

— Verification and validation requirements.

The SRS shall also provide reference for API 17G where applicable.